HONG'S BELT®

Perfect Conveyor Components

HONGSBELT® Modular Conveyor Belt, the combination of preciseness and artistry which creates new conveying concept. As the leader and largest manufacturer of Modular Belt in China, HONGSBELT® not only have complete production lines to meet different application requirement, but also can provide comprehensive product knowledge and experience. Through ten years' innovation and R&D, there are more than 600 types different in material and color, which provide you with perfect support in conveying field.

HONGSBELT® Modular Conveyor Belt makes an immense difference for the conveying in Food & Non-food industries for its strong, durable, low maintenance and easy to clean features.



GLOBAL RESOURCES AND BUSINESS NO BOUNDARY



HONGSBELT® is one of the most famous manufacturer and supplier of Industrial belt in the world market with strong power in R&D, the products including: Modular Conveyor belt, PU/PVC Conveyor belt, Elevator belt, special processing high-speed Timing belt etc. The company has passed ISO9001:2000 quality Certification and FDA Certification.

HONGSBELT® put focus on Customers' demand, and insists on constant innovation to meet customers' needs, bring better conveying system with better quality products.

OUR QUALIFICATION

ISO9001:2008 FDA Patented product

HONGSBELT International (HK) Limited

Add: No.3 SongShan Road,XinMu Street, PingHu, ShenZhen, Guangdong, China (518111)

Tel: 0086-755-89973510

Fax: 0086-755-89974246

Email: info@hongsbelt.com

Web: www.hongsbelt.com.cn

Perfect Conveyor Components







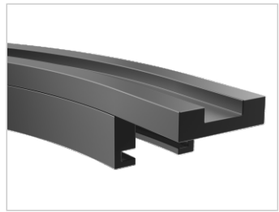



www.hongsbelt.com.cn

HONG'S BELT®

Perfect Conveyor Components

Preface

HONGSBELT with fifteen glorious years of development since its foundation in 1999, has shifted its business from simply selling traditional conveyor belts to providing solutions of the smart conveyor belts, integrating R&D, manufacturing and sales. We are committed to provide services for our customers with unchanging sincerity and devotion.

Adhering to the pursuit belief of “Innovation must be made”, HONGSBELT team has actively thrown themselves into R&D with a heavy investment on establishing R&D Department, Refine Modular Department, Plastic & Shaping Workshop, etc. and dedicated themselves to development of the smart modular conveyor belts. In the meantime, HONGSBELT has conducted global marketing and created an excellent annual turnover increase of 30%. With over 60 marketing sites established and covering every corner worldwide at present, HONGSBELT has realized the expectation of being based in China and taking the whole world in view.

In terms of pursuing product quality, we still stand at the original starting point – technology orientation. While providing complete supply chain product system for worldwide agents as well as OEM, we know well the absolute principle that the most important mutual dependence relationship lies in technology support.

Therefore, besides sticking to product quality first, we employ the perfect technology to render the most valuable services! With the whole manpower of technology departments, this technology engineering manual is compiled to give all users of HONGSBELT products an access to grasp the most accurate design data in the fastest way, serve as evidence for the end-users and participating engineers and technicians and provide the best reference for the planning and organization of various conveying equipment systems.

In connection with the foreword, our passion for industry automation shall never fade. On behalf of all the staff of HONGSBELT, we here deliver to our customers that from today on, HONGSBELT shall offer professional services with broader vision to establish a benchmark for the world smart conveyor belt industry. All Hongsbelt product users shall witness us to realize our commitment. That is: products of highest quality and most professional services.

President of HONGSBELT:



Company Profile

HONGSBELT® provides the perfect accessories for conveyor lines: high-strength wear-resistant low-wear guide rails and accessories. Perfect accessories can be fully available for the assembly, support and guidance of conveyor lines, providing quick solutions. HONGSBELT® provides numerous innovative solutions to meet your various production needs, and main products include:

Wearing strip (wear strip) - HONGSBELT® provides regular wearing strips, flat wearing strips, heteroideus wearing strips, T-shaped wearing strips for turning conveyors, high-strength wear-resistant backing strips for beverage bottles, wearing strips for spiral turning conveyors, clip-on wearing strips, clip-on wearing plates and J-shaped wearing strips.

Curved seats and guide rails of turning track - HONGSBELT® curved seats of turning tracks can provide guiding structure, and then offer high-quality running surface for chain plates and chain network under long-term operations. HONGSBELT® guide rails are characterized by stainless shells and embedded high-quality materials. A variety of embedded materials are available: UHMW, unique low-friction materials and anti-static materials. All materials have passed the FDA certification, and can be used in most application enviornment.

Roller and Guard rail - HONGSBELT® unique low-friction guardrail can improve the fluency of products at the combination and diversion.

Accessories for modular conveyor belts: flight, scoop flight, 45° inclining flight, side walls, SUS304Rods&Links, Pusher, sprockets, We have many kinds of specifications that can fully meet your various design needs.

In addition to the accessories for modular conveyor belts, we can also provide the following common accessories:

1. Holders and positioning devices - guide rail clamps, metal guide rail holders for plastic machines, handles, and link blocks compose a fixed combination. HONGSBELT® holders can quickly adjust the width of the guardrail according to the size of conveyor bottle.
2. Framework and supporters - threaded pipe ends, conditional supporting feet, shock pads, bipods and tripods, column caps and side bearings can provide reliable structures for the conveyor lines, with favorable adjustability.
3. Rollers and rotary products - HONGSBELT® gravity conveyors, rotating sprocket, bearings and customized plastic rollers can meet various conveyor requirements.
4. Customized plastic processing - HONGSBELT® has strong R&D and processing capabilities, so it can provide high-quality plastic products according to your specific needs.

Contents

Curved seats of turning guide rail ---- 1

Finger plate for Seats of Curved Guide Rail ---- 10

High-strength chain guide rail ---- 12

Guardrail ---- 19

Cushion rail ---- 35

Bottle-hanging strip ---- 39

Heteroideus wearing strip ---- 42

Accessories ---- 56

Curved seats of turning guide rail

880TAB/881TAB series of Uighur guide lateral bending chain guide rail

- Materials are black ultrahigh molecular polyethylene.
- The highest temperature is 90℃.
- Angle of bending guide rail a=15° ~ 90°
- 880TAB-K325/K450 and SS881TAB-K325/K450 have the same width of chain plates and bending rails, and straight rails can be used universally.

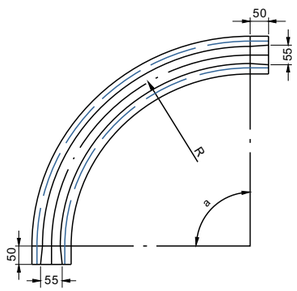

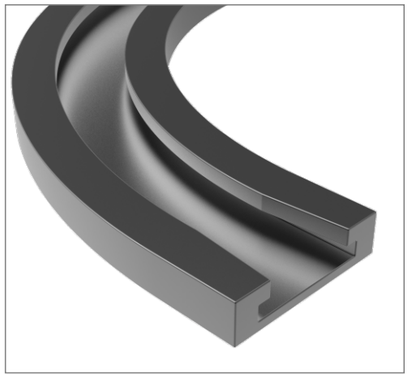

One-row

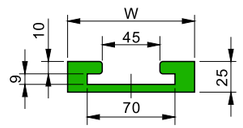

Two-row

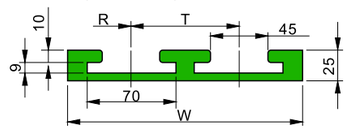

Three-row

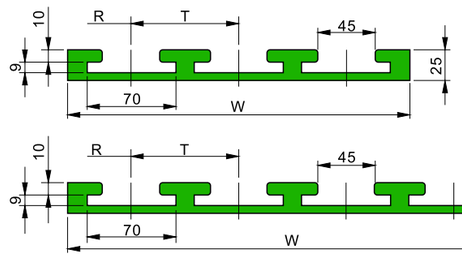

Four-row

Parameters of 880TAB/881TAB series of bending guide rails

Name	Model	Minimum center radius R	Width W	Spacing T
880TAB–K325 One-row	HS-880TAB-K325-R500-100-1	500	100	–
880TAB–K325 Two-row	HS-880TAB-K325-R500-185-2	500	185	85
880TAB–K325 Three-row	HS-880TAB-K325-R500-270-3	500	270	85
880TAB–K325 Four-row	HS-880TAB-K325-R500-355-4	500	355	85
880TAB–K450 One-row	HS-880TAB-K450-R610-130-1	610	130	–
880TAB–K450 Two-row	HS-880TAB-K450-R610-250-2	610	250	120
880TAB–K450 Three-row	HS-880TAB-K450-R610-370-3	610	370	120
880TAB–K450 Four-row	HS-880TAB-K450-R610-490-4	610	490	120
SS881TAB–K600 One-row	HS-SS881TAB-K600-R610-160-1	610	160	–
SS881TAB–K600 Two-row	HS-SS881TAB-K600-R610-320-2	610	320	160
SS881TAB–K750 One-row	HS-SS881TAB-K750-R610-200-1	610	200	–
SS881TAB–K750 Two-row	HS-SS881TAB-K750-R610-400-2	610	400	200

Identification of bending rail models: chain plate model + center radius of bending rail + width of bending rail + quantity of bending rails

Curved seats of turning guide rail

HONG'S BELT®
Perfect Conveyor Components

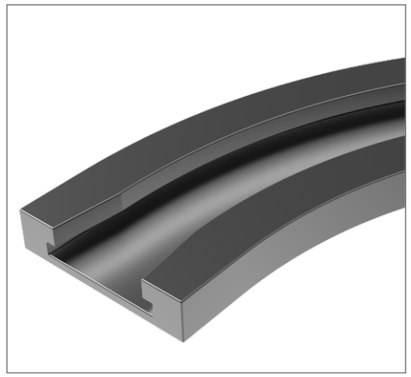

882TAB series of dovetail lateral bending chain guide rail

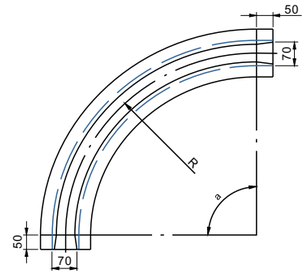

- Materials are black ultrahigh molecular polyethylene.
- The highest temperature is 90℃.
- Angle of bending guide rail a=15° ~ 90°

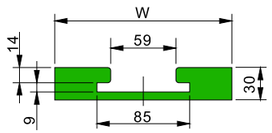

One-row

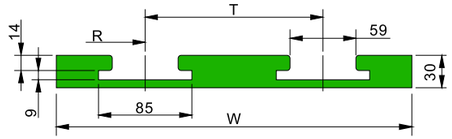

Two-row

Parameters of 882TAB series of bending guide rails

Name	Model	Minimum center radius R	Width W	Spacing T
882TAB–K500 One-row	HS-882TAB-K500-R610-130-1	610	130	–
882TAB–K500 Two-row	HS-882TAB-K500-R610-260-2	610	260	130
882TAB–K600 One-row	HS-882TAB-K600-R610-160-1	610	160	–
882TAB–K600 Two-row	HS-882TAB-K600-R610-320-2	610	320	160
882TAB–K750 One-row	HS-882TAB-K750-R610-200-1	610	200	–
882TAB–K750 Two-row	HS-882TAB-K750-R610-400-2	610	400	200
882TAB–K1000 One-row	HS-882TAB-K1000-R610-260-1	610	260	–
882TAB–K1000 Two-row	HS-882TAB-K1000-R610-520-2	610	520	260
882TAB–K1200 One-row	HS-882TAB-K1200-R610-310-1	610	310	–
882TAB–K1200 Two-row	HS-882TAB-K1200-R610-620-2	610	620	310

Identification of bending rail models: chain plate model + center radius of bending rail + width of bending rail + quantity of bending rails

Curved seats of turning guide rail

880 series of dovetail lateral bending chain guide rail

- Materials are black ultrahigh molecular polyethylene.
- The highest temperature is 90℃.
- Angle of bending guide rail a=15° ~ 90°

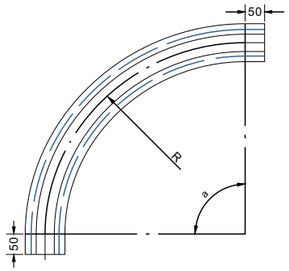



One-row

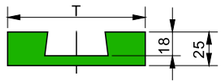

Two-row

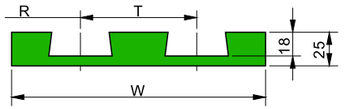

Three-row

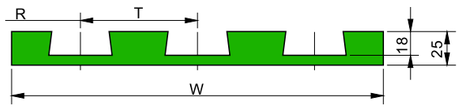

Four-row

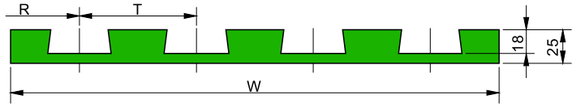

Parameters of 880 series of dovetail lateral bending chain guide rail

Name	Model	Minimum center radius R	Width W	Spacing T
880–K325 One-row	HS-880-K325-R500-100-1	500	100	–
880–K325 Two-row	HS-880-K325-R500-185-2	500	185	85
880–K325 Three-row	HS-880-K325-R500-270-3	500	270	85
880–K325 Four-row	HS-880-K325-R500-355-4	500	355	85
880–K450 One-row	HS-880-K450-R610-130-1	610	130	–
880–K450 Two-row	HS-880-K450-R610-150-2	610	250	120
880–K450 Three-row	HS-880-K450-R610-370-3	610	370	120
880–K450 Four-row	HS-880-K450-R610-490-4	610	490	120

Identification of bending rail models: chain plate model + center radius of bending rail + width of bending rail + quantity of bending rails

Curved seats of turning guide rail

HONG'S BELT®
Perfect Conveyor Components

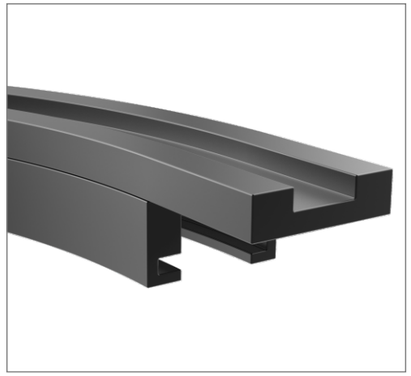

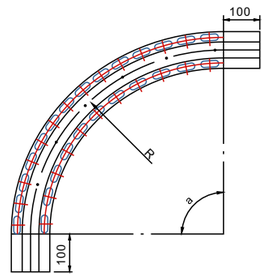

880M series of magnetic lateral bending chain guide rail

- Materials are black ultra-high molecular polyethylene + magnetic iron + screw sets.
- The highest temperature is 90℃.
- Angle of bending guide rail a=15° ~ 90°

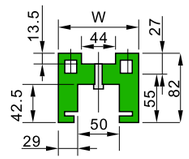

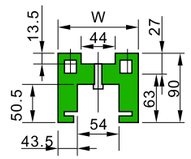

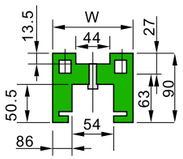

One-row

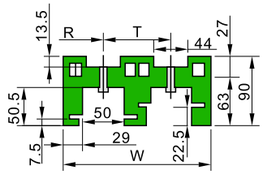

880M-K325

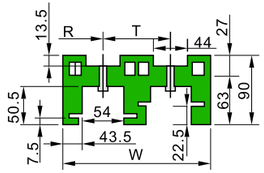

880M-K450

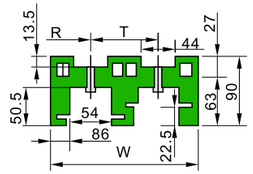

880M-K750

Two-row

Parameters of 880M series of magnetic lateral bending chain guide rail

Name	Model	Minimum center radius R	Width W	Spacing T
880M–K325 One-row	HS-880M-K325-R500-100-1	500	100	–
880M–K325 Two-row	HS-880M-K325-R500-185-2	500	185	85
880M–K325 Three-row	HS-880M-K325-R500-270-3	500	270	85
880M–K325 Four-row	HS-880M-K325-R500-355-4	500	355	85
880M–K450 One-row	HS-880M-K450-R610-130-1	610	129	–
880M–K450 Two-row	HS-880M-K450-R610-250-2	610	249	120
880M–K450 Three-row	HS-880M-K450-R610-370-3	610	369	120
880M–K450 Four-row	HS-880M-K450-R610-490-4	610	489	120
880M–K750 One-row	HS-880M-K750-R610-214-1	610	214	–
880M–K750 Two-row	HS-880M-K750-R610-410-2	610	410	196

Identification of bending rail models: chain plate model + center radius of bending rail + width of bending rail + quantity of bending rails

880TAB-RT series of small radius lateral bending chain guide rail

- Materials are black ultrahigh molecular polyethylene.
- The highest temperature is 90℃.
- Angle of bending guide rail a=15° ~90°

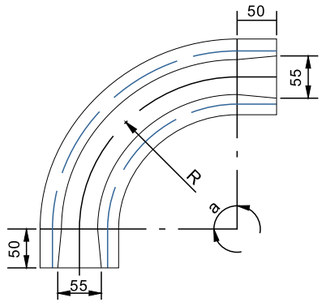



One-row

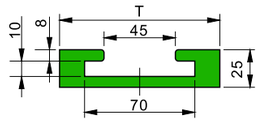

Two-row

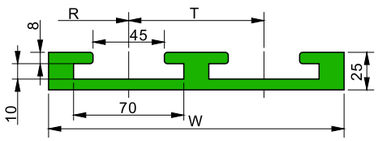

Three-row

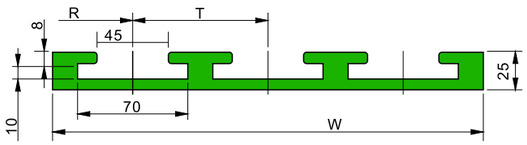

Parameters of 882TAB-RT series of bending guide rails

Name	Model	Minimum center radius R	Width W	Spacing T
880TAB–RT–K325 One-row	HS-880TAB-RT-K325-R200-100-1	200	100	–
880TAB–RT–K325 Two-row	HS-880TAB-RT-K325-R200-185-2	200	185	85
880TAB–RT–K325 Three-row	HS-880TAB-RT-K325-R200-270-3	200	270	85
880TAB–RT–K450 One-row	HS-880TAB-RT-K450-R200-130-1	200	130	–
880TAB–RT–K450 Two-row	HS-880TAB-RT-K450-R200-250-2	200	250	120
880TAB–RT–K450 Three-row	HS-880TAB-RT-K450-R200-370-3	200	370	120

Identification of bending rail models: chain plate model + center radius of bending rail + width of bending rail + quantity of bending rails

Curved seats of turning guide rail

HONG'S BELT®
Perfect Conveyor Components

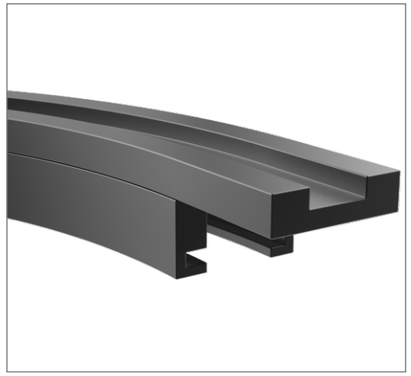

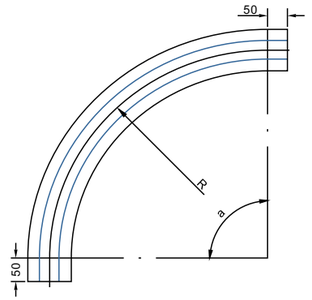

1050 series of heavy lateral bending chain guide rail

- Materials are black ultrahigh molecular polyethylene.
- The highest temperature is 90℃.
- Angle of bending guide rail a=15° ~90°

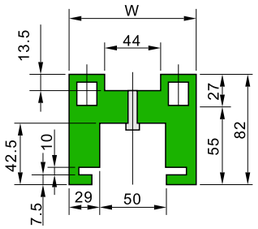

One-row

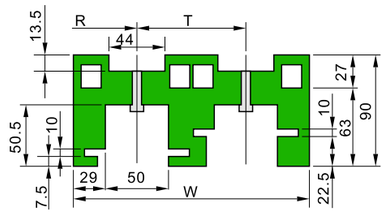

Two-row

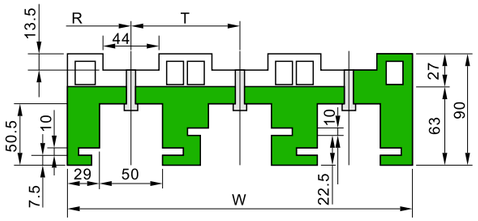

Three-row

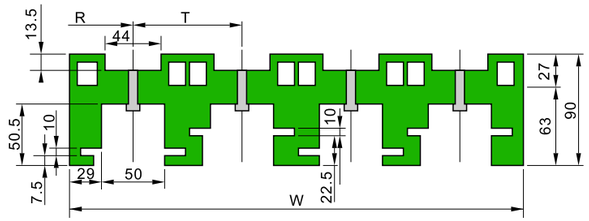

Four-row

Parameters of 1050 series of heavy lateral bending chain guide rail

Name	Model	Minimum center radius R	Width W	Spacing T
1050–K325 One-row	HS-1050-K325-R500-100-1	500	100	–
1050–K325 Two-row	HS-1050-K325-R500-185-2	500	185	85
1050–K325 Three-row	HS-1050-K325-R500-270-3	500	270	85
1050–K325 Four-row	HS-1050-K325-R500-355-4	500	355	85

Identification of bending rail models: chain plate model + center radius of bending rail + width of bending rail + quantity of bending rails

Curved seats of turning guide rail

Tooth-shaped chain bending guide rail

- Materials are black ultrahigh molecular polyethylene.
- The highest temperature is 90℃.
- Angle of bending guide rail a=15° ~ 90°

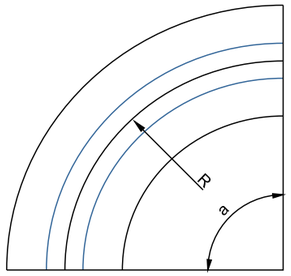

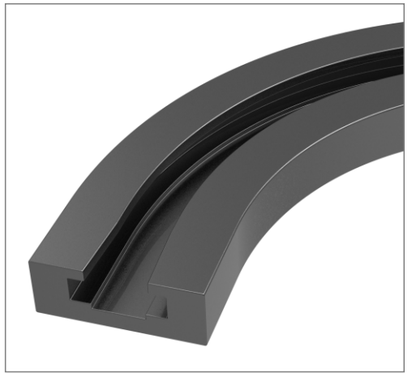

HS-7100-63

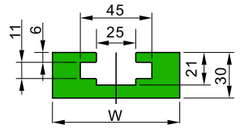

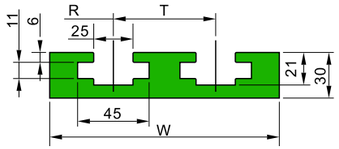

HS-7100-83

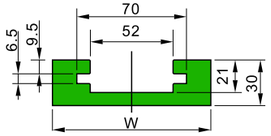

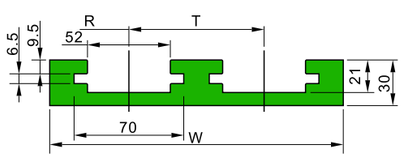

HS-7100-103

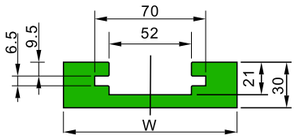

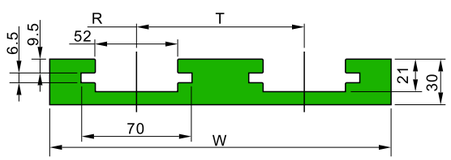

HS-7100-146

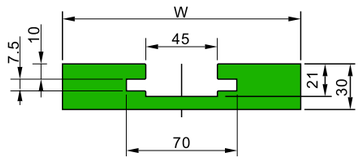

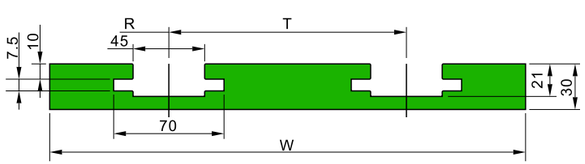

Parameters of Tooth-shaped chain bending guide rail

Name	Model	Minimum center radius R	Width W	Spacing T
63T-One-row	HS-7100-63-R150-80-1	150	80	–
63T-Two-row	HS-7100-63-R150-185-2	150	145	65
83T-One-row	HS-7100-83-R150-100-1	150	100	–
83T-Two-row	HS-7100-83-R150-185-2	150	185	85
103T-One-row	HS-7100-103-R250-110-1	250	110	–
103T-Two-row	HS-7100-103-R250-215-2	250	215	105
146T-One-row	HS-7100-146-R250-150-1	250	150	–
146T-Two-row	HS-7100-146-R250-300-2	250	300	150

Identification of bending rail models: chain plate model + center radius of bending rail + width of bending rail + quantity of bending rails

Curved seats of turning guide rail

HONG'S BELT®
Perfect Conveyor Components

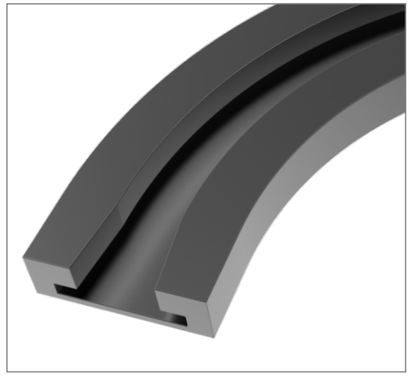

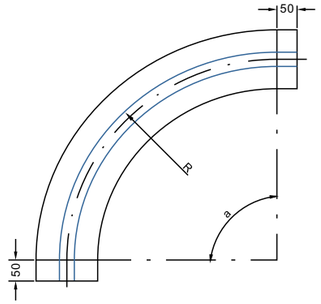

1873 series of Bending guide rail

- Materials are black ultrahigh molecular polyethylene.
- The highest temperature is 90℃.
- Angle of bending guide rail a=15° ~ 90°

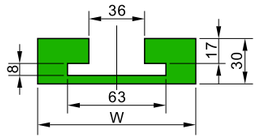

One-row

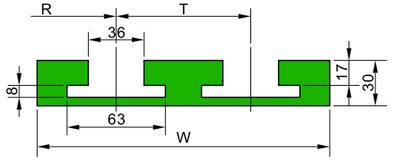

Two-row

Parameters of 1873 series of Bending guide rail

Name	Model	Minimum center radius R	Width W	Spacing T
1873–K325 One-row	HS-1873-K325-R400-100-1	400	100	–
1873–K325 Two-row	HS-1873-K325-R400-185-2	400	185	85
1873–K450 One-row	HS-1873-K450-R400-130-1	400	130	–
1873–K450 Two-row	HS-1873-K450-R400-250-2	400	250	120
1873–K600 One-row	HS-1873-K600-R500-160-1	500	160	–
1873–K600 Two-row	HS-1873-K600-R500-320-2	500	320	160
1873–K750 One-row	HS-1873-K750-R500-200-1	500	200	–
1873–K750 Two-row	HS-1873-K750-R500-400-2	500	400	200
1873–K1000 One-row	HS-1873-K1000-R500-260-1	500	260	–
1873–K1000 Two-row	HS-1873-K1000-R500-520-2	500	520	260
1873–K1200 One-row	HS-1873-K1200-R500-310-1	500	310	–
1873–K1200 Two-row	HS-1873-K1200-R500-620-2	500	620	310

Identification of bending rail models: chain plate model + center radius of bending rail + width of bending rail + quantity of bending rails

Curved seats of turning guide rail

Vertical chain guide rail

- Materials are black ultrahigh molecular polyethylene.
- The highest temperature is 90℃.
- Angle of bending guide rail a=15° ~90°

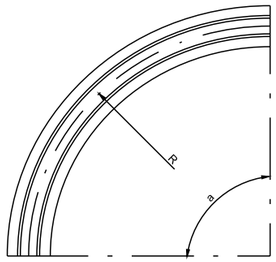

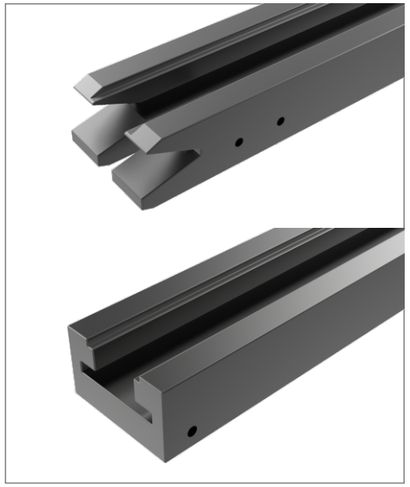

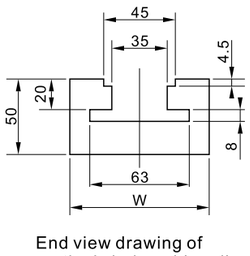

End view drawing of vertical chain guide rail

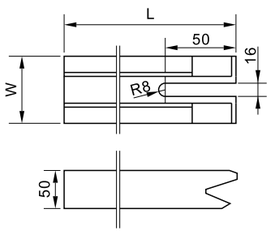

Straight guide rail of vertical chain input terminal

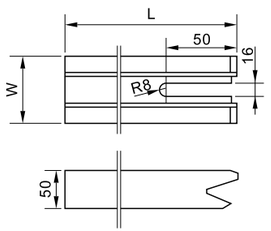

Straight guide rail of vertical chain output terminal

Parameters of vertical chain guide rail

Name	Model	Minimum center radius R	Width W	Spacing T
One-row bending rail of Vertical chain	HS-R500-88-1	500	88	–
Straight guide rail of vertical chain input terminal	HS-L418-88-1	418	88	–
Straight guide rail of vertical chain output terminal	HS-L418-88-1	418	88	–
Identification of bending rail models: chain plate model + center radius of bending rail + width of bending rail + quantity of bending rails				

Finger plate for Seats of Curved Guide Rail

HONG'S BELT®
Perfect Conveyor Components

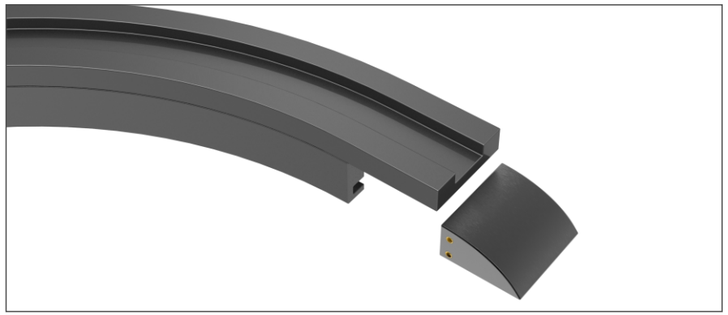

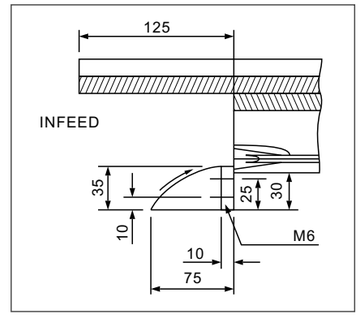

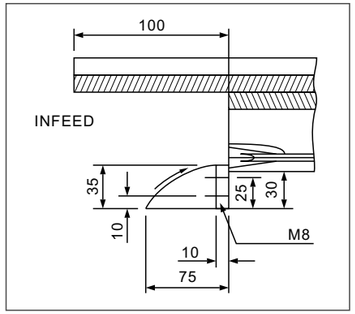

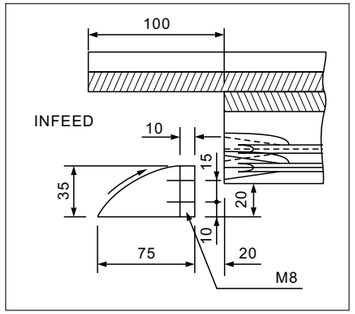

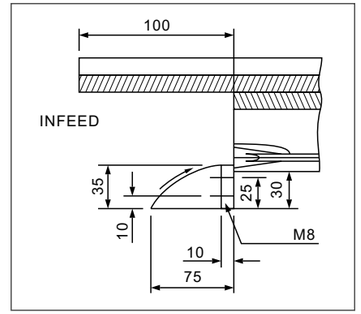

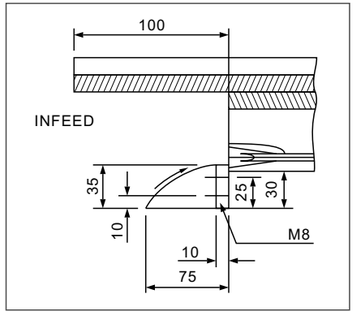

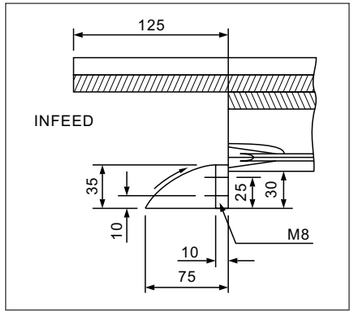

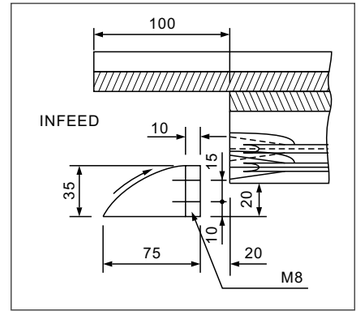

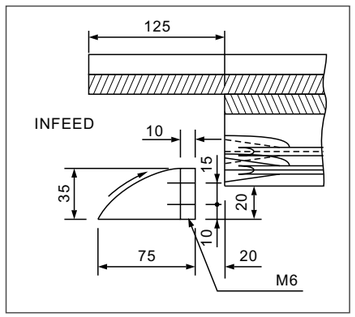

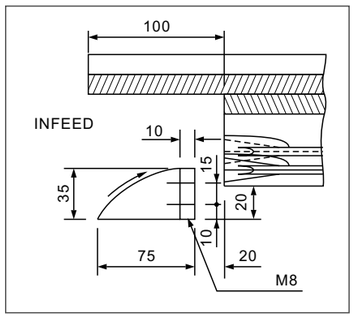

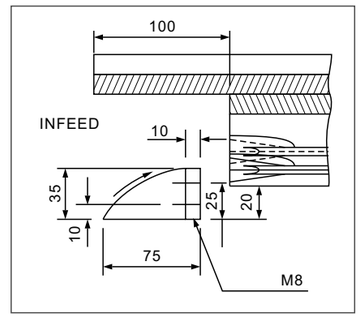

Finger plate for Seats of Curved Guide Rail

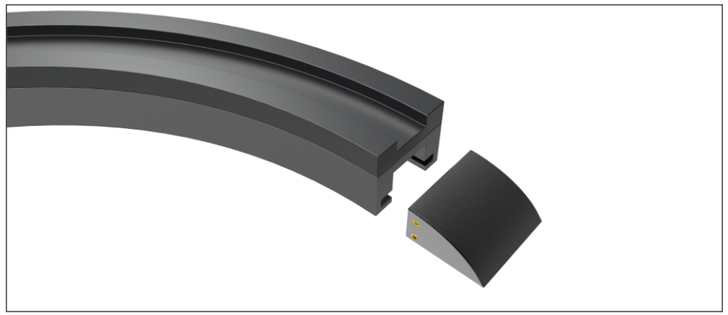

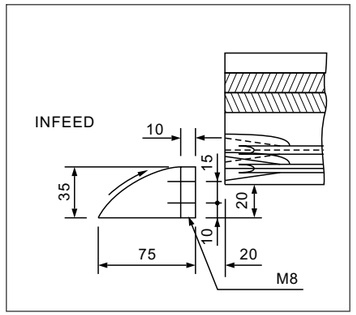

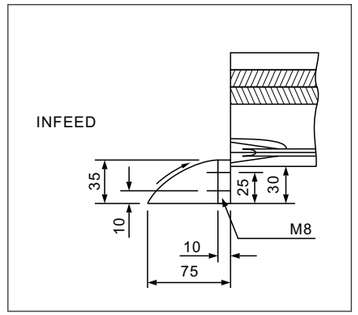

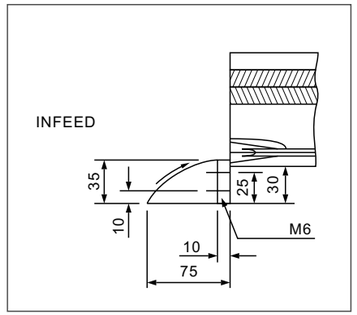

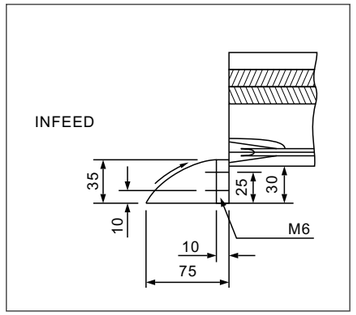

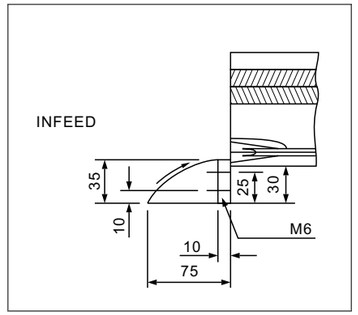

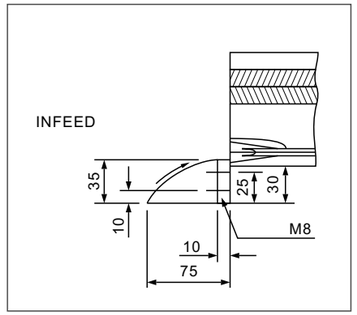

Chain guide rail

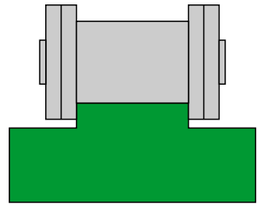

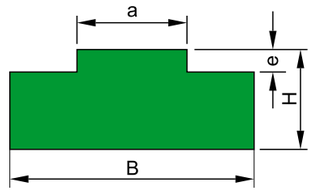

Single-chain guide rail A1 model
Standard length:2000mm

Type No.	Pitch(inch)	ISO-No.	a	e	B	H
HS-DG-T0	3/8" X7/32"	06-B1	5.5	1.5	15.0	10.0
HS-DG-T1	1/2" X5/16"	08-B1	7.5	2.2	20.0	10.0
HS-DG-T2	5/8" X3/8"	10-B1	9.3	2.6	20.0	10.0
HS-DG-T3	3/4" X7/16"	12-B1	11.3	2.6	25.0	10.0
HS-DG-T4	1" X17mm	16-B1	16.5	4.2	40.0	15.0
HS-DG-T5	1 1/4" X3/4"	20-B1	19.0	4.2	45.0	15.0
HS-DG-T6	1 1/2" X1"	24-B1	24.7	5.5	60.0	15.0
HS-DG-T7	1 3/4" X31mm	28-B1	30.1	6.8	75.0	20.0
HS-DG-T8	2" X31mm	32-B1	30.1	7.7	80.0	20.0

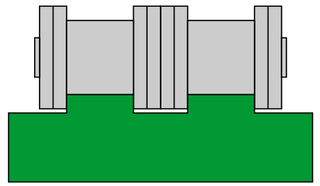

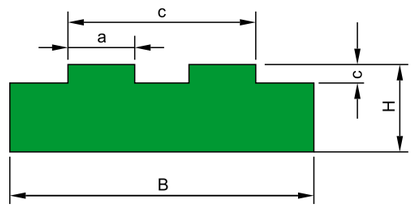

Dual-chain guide rail A2 model
Standard length:2000mm

Type No.	Pitch(inch)	ISO-No.	a	c	e	B	H
HS-DG-T0.2	3/8" X7/32"	06-B2	5.5	15.7	1.5	25.0	10.0
HS-DG-T1.2	1/2" X5/16"	08-B2	7.5	21.4	2.2	35.0	10.0
HS-DG-T2.2	5/8" X3/8"	10-B2	9.3	25.8	2.6	40.0	10.0
HS-DG-T3.2	3/4" X7/16"	12-B2	11.3	30.6	2.6	45.0	10.0
HS-DG-T4.2	1" X17mm	16-B2	16.5	48.0	4.2	48.0	15.0
HS-DG-T5.2	1 1/4" X3/4"	20-B2	19.0	55.0	4.2	55.0	15.0
HS-DG-T6.2	1 1/2" X1"	24-B2	24.7	72.0	5.5	72.0	20.0
HS-DG-T7.2	1 3/4" X31mm	28-B2	30.1	89.0	6.8	89.0	25.0
HS-DG-T8.2	2" X31mm	32-B2	30.1	88.0	7.7	88.0	30.0

High-strength chain guide rail

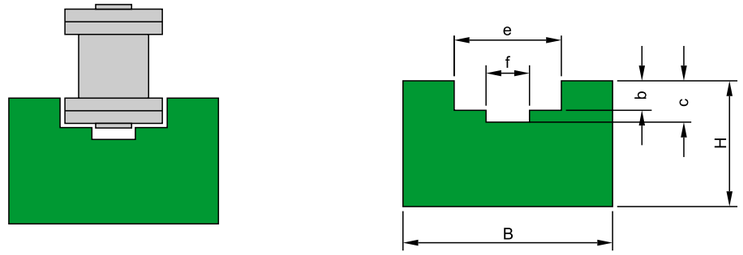

Single-chain guide rail B model
Standard length:2000mm

Type No.	Pitch(inch)	ISO-No.	b	c	e	f	B	H
HS-DG-U0	3/8" X7/32"	06-B1	2.8	4.2	9.2	3.7	15.0	15.0
HS-DG-U1	1/2" X5/16"	08-B1	3.5	4.8	12.7	4.9	20.0	15.0
HS-DG-U2	5/8" X3/8"	10-B1	3.5	5.2	15.2	5.6	25.0	15.0
HS-DG-U3	3/4" X7/16"	12-B1	3.9	5.7	16.7	6.3	25.0	20.0
HS-DG-U4	1" X17mm	16-B1	8.4	10.0	21.7	8.9	35.0	25.0

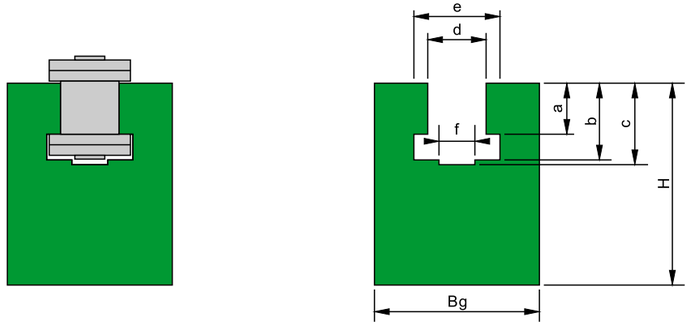

Single-chain guide rail C model
Standard length:2000mm

Type No.	Pitch(inch)	ISO-No.	a	b	c	d	e	f	B	H
HS-DG-BL 0	3/8" X7/32"	06-B1	5.5	9.0	10.2	6.6	9.2	3.7	20.0	25.0
HS-DG-BL 1	1/2" X5/16"	08-B1	7.5	11.7	12.9	8.7	12.7	4.9	24.0	30.0
HS-DG-BL 2	5/8" X3/8"	10-B1	9.3	13.7	15.0	10.4	15.2	5.6	30.0	35.0
HS-DG-BL 3	3/4" X7/16"	12-B1	11.3	16.2	17.8	12.3	16.7	6.6	40.0	35.0
HS-DG-BL 4	1" X17mm	16-B1	16.5	26.0	27.0	16.1	21.7	8.9	40.0	45.0
HS-DG-BL 5	1 1/4" X3/4"	20-B1	19.0	29.5	31.5	19.3	27.4	11.0	50.0	50.0
HS-DG-BL 6	1 1/2" X1"	24-B1	24.7	38.5	40.3	25.7	35.0	15.5	60.0	60.0
HS-DG-BL 7	1 3/4" X31mm	28-B1	30.1	47.3	49.2	28.3	39.0	17.0	60.0	70.0
HS-DG-BL 8	2" X31mm	32-B1	30.1	47.5	53.3	29.6	44.0	19.0	70.0	75.0

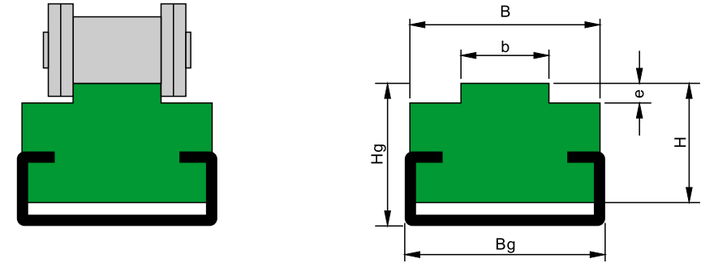

Single-chain guide rail CA1 model
Standard length:2000mm

Type No.	Pitch(inch)	ISO-No.	b	e	B	Bg	H	Hg	C-sectio	
HS-DG-T1C3A15	1/2" X5/16"	08-B1	7.5	2.2	20.0	20.0	15.0	18.0	C 20/10	C3
HS-DG-T2C3A15	5/8" X3/8"	10-B1	9.3	2.6	20.0	20.0	15.0	18.0	C 20/10	C3
HS-DG-T3C3A15	3/4" X7/16"	12-B1	11.3	2.6	20.0	20.0	15.0	18.0	C 20/10	C3
HS-DG-T4C5A15	1" X17mm	16-B1	16.5	4.2	24.0	28.0	15.0	19.0	C 28/12	C5
HS-DG-T5C5A15	1 1/4" X3/4"	20-B1	19.0	4.2	28.0	28.0	15.0	19.0	C 28/12	C5
HS-DG-T6C9A25	1 1/2" X1"	24-B1	24.7	5.5	33.0	38.0	25.0	30.0	C 38/18	C9
HS-DG-T7C9A25	1 3/4" X31mm	28-B1	30.1	6.8	38.0	38.0	25.0	30.0	C 38/18	C9
HS-DG-T8C9A25	2" X31mm	32-B1	30.1	7.7	38.0	38.0	25.0	30.0	C 38/18	C9

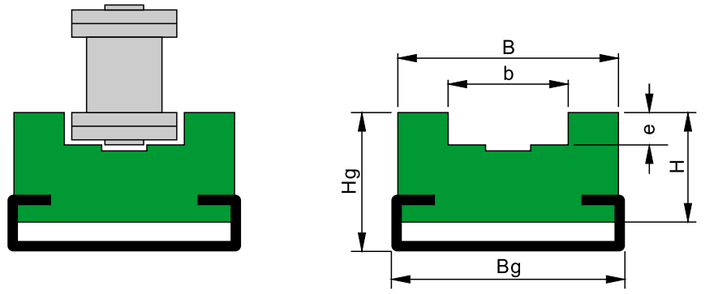

Single-chain guide rail CB model
Standard length:2000mm

Type No.	Pitch(inch)	ISO-No.	b	e	B	Bg	H	Hg	C-sectio	
HS-DG-CU0	1/2" X5/16"	08-B1	12.7	3.5	20.0	20.0	10.0	15.0	C 20/10	C3
HS-DG-CU1	5/8" X3/8"	10-B1	15.2	3.5	24.0	28.0	12.0	19.0	C 28/12	C5
HS-DG-CU2	3/4" X7/16"	12-B1	16.7	3.9	24.0	28.0	12.0	19.0	C 28/12	C5
HS-DG-CU3	3/4" X7/16"	16-B1	21.7	8.4	33.0	38.0	20.0	24.0	C 38/18	C9

High-strength chain guide rail

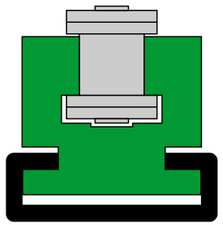

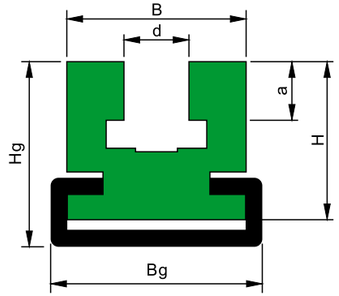

Single-chain guide rail CC model
Standard length:2000mm

Type No.	Pitch(inch)	ISO-No.	a	d	B	Bg	H	Hg	C-sectio	
HS-DG-BL0 C3	3/8" X7/32"	06-B1	5.5	6.6	17.0	20.0	19.0	21.0	C 20/10	C3
HS-DG-BL1 C5	1/2" X5/16"	08-B1	7.5	8.7	24.0	28.0	26.0	29.0	C 28/12	C3
HS-DG-BL2 C5	5/8" X3/8"	10-B1	9.3	10.4	24.0	28.0	26.0	29.0	C 28/12	C3
HS-DG-BL3 C9	3/4" X7/16"	12-B1	11.3	12.3	32.0	38.0	38.0	42.0	C 38/18	C5
HS-DG-BL4 C9	1" X17mm	16-B1	16.5	16.1	40.0	40.0	46.0	50.0	C 38/18	C5

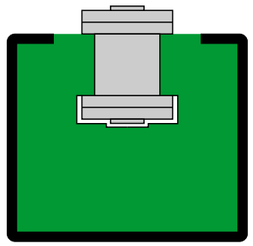

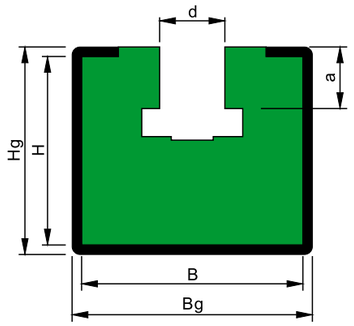

Single-chain guide rail CCG model
Standard length:2000mm

Type No.	Pitch(inch)	ISO-No.	a	d	B	Bg	H	Hg	C-sectio	
HS-DG-C10.0	3/8" X7/32"	06-B1	5.5	6.6	26.0	30.0	22.0	24.0	C 30/24	C10
HS-DG-C10.1	1/2" X5/16"	08-B1	7.3	8.7	26.0	30.0	22.0	24.0	C 30/24	C10
HS-DG-C10.2	5/8" X3/8"	10-B1	9.3	10.4	26.0	30.0	22.0	24.0	C 30/24	C10
HS-DG-C10.3	3/4" X7/16"	12-B1	11.3	12.3	26.0	30.0	22.0	24.0	C 30/24	C10
HS-DG-C11.4	1" X17mm	16-B1	16.5	16.1	40.0	45.0	37.5	40.0	C 45/40	C11
HS-DG-C11.5	1 1/4" X3/4"	20-B1	19.0	19.3	40.0	45.0	37.5	40.0	C 45/40	C11

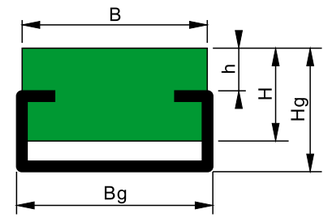

B	Bg	H	Hg	h	C-section	
20.0	20.0	10.0	14.0	4.0	C 20/10	C3
24.0	24.0	6.0	8.0	2.8	C 24/5	C1
28.0	28.0	15.0	18.0	6.0	C 28/12	C5
38.0	38.0	12.0	22.0	4.0	C 38/18	C9

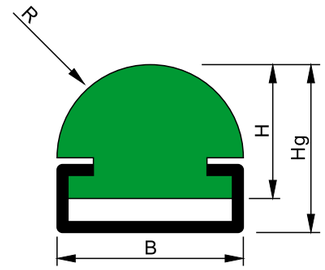

R	B	H	Hg	C-section	
12.0	20.0	17.0	20.0	C 20/10	C3

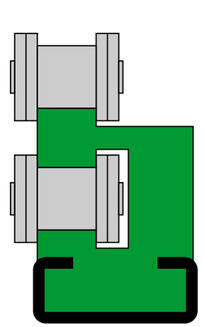

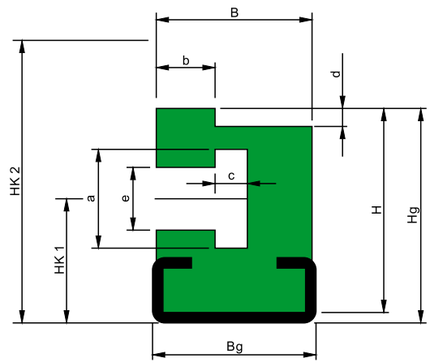

Single-chain guide rail CC model
Standard length:2000mm

Type No.	Pitch(inch)	ISO-No.	a	b	c	d	e	B/Bg	H	Hg	HK 1	HK 2	C-section	
HS-DG-Combi 0	3/8" X7/32"	06-B1	9.5	5.5	4.6	1.5	6.6	20.0	24.4	26.9	17.0	30.2	C 20/10	C3
HS-DG-Combi 1	1/2" X5/16"	08-B1	13.0	7.5	5.4	2.2	8.6	20.0	26.9	29.4	18.0	33.8	C 20/10	C3
HS-DG-Combi 2	5/8" X3/8"	10-B1	15.5	9.3	5.6	2.6	10.4	20.0	33.8	36.2	21.0	41.4	C 20/10	C3
HS-DG-Combi 3	3/4" X7/16"	12-B1	17.0	11.3	6.4	2.6	12.2	28.0	37.3	40.3	24.0	46.5	C 28/12	C5
HS-DG-Combi 4	1" X17mm	16-B1	22.0	16.5	10.5	4.2	16.0	38.0	50.5	54.0	34.0	62.0	C 38/18	C9

The length of all guide rails can be selected arbitrarily.
The longest is 6m. Consultations should be made for special colors and sizes.

C-sectio

Belt guide rail

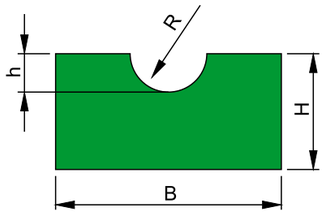

Round belt guide rail

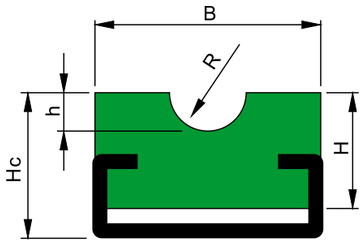

Round belt guide rail
with C-shaped device

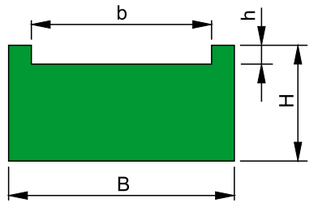

Flat belt guide rail

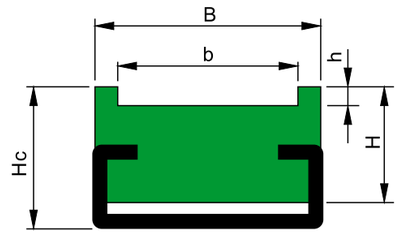

Flat belt guide rail
with C-shaped device

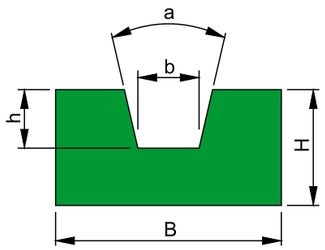

Triangle belt guide rail

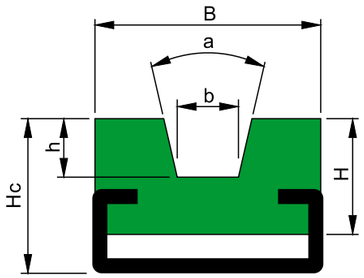

Triangle belt guide rail
with C-shaped device

C-shaped iron
Galvanized iron/stainless steel

Type No.	No.	kg/m
HS-DG-C1	C24/5	0.28
HS-DG-C3	C20/10	0.48
HS-DG-C5	C28/12	0.85
HS-DG-C9	C38/18	1.50
HS-DG-C10	C30/24	0.94
HS-DG-C11	C45/40	2.00
HS-DG-C12	C60/20	2.18

NO. C24/5

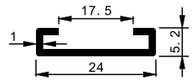

HS-DG-C1

NO. C20/10

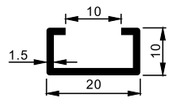

HS-DG-C3

NO. C28/12

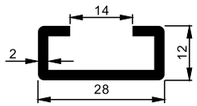

HS-DG-C5

NO. C38/18

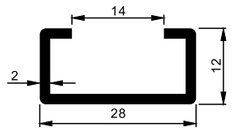

HS-DG-C9

NO. C30/24

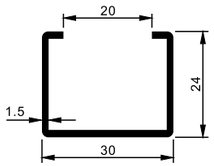

HS-DG-C10

NO. C45/40

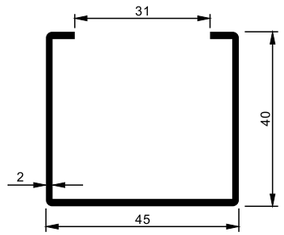

HS-DG-C11

NO. C60/20

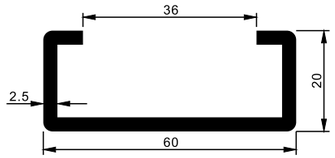

HS-DG-C12

Guardrail

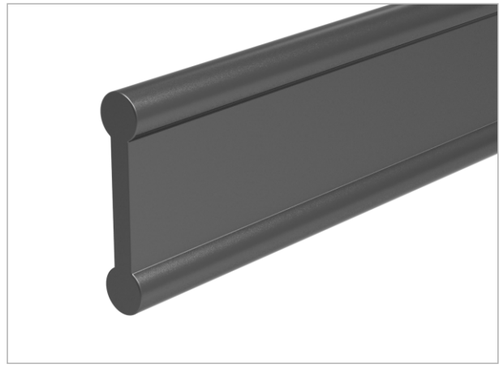

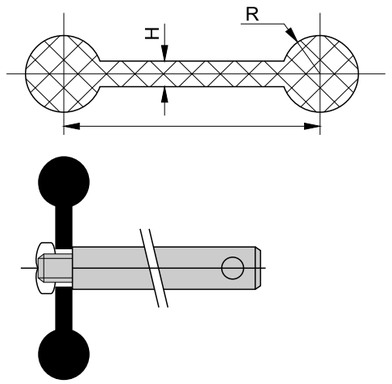

Type	Chain Type	Center for Distance mm	Radius of the ball mm	Thickness mm	Material	Colour
Dumbbell guardrail	HS-G3A	64	8	6	700,000 molecular weight ultrahigh polyethylene	Black
	HS-G3B	86	9	6		

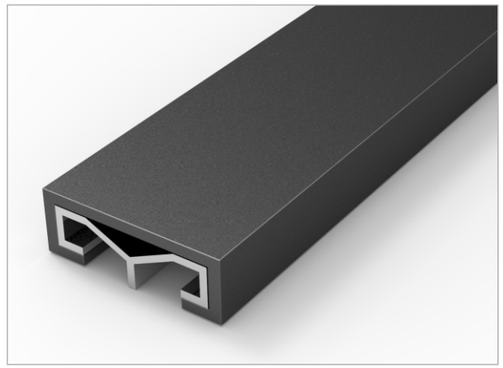

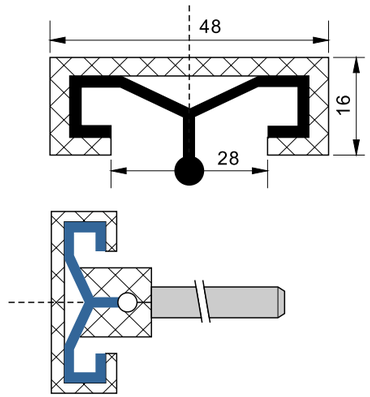

Type	Chain Type	Material	Colour
Parallel guardrail	HS-G4	700,000 molecular weight ultrahigh polyethylene	Black

Guardrail

HONG'S BELT®
Perfect Conveyor Components



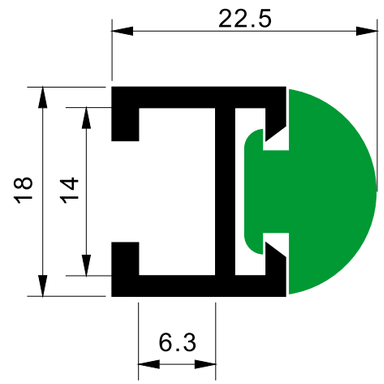

Type	Chain Type	Material	Colour
Round guardrail	HS-G6	700,000 molecular weight ultrahigh polyethylene	Green

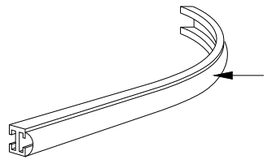

Minimum bending radius: R min 110
Internal bending

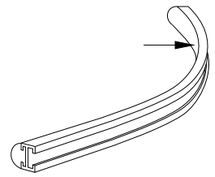

Minimum bending radius: R min 95
External bending

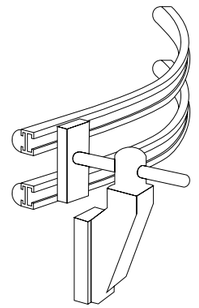



M8 outer hexagon bolt

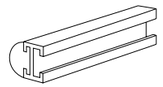

Guardrail

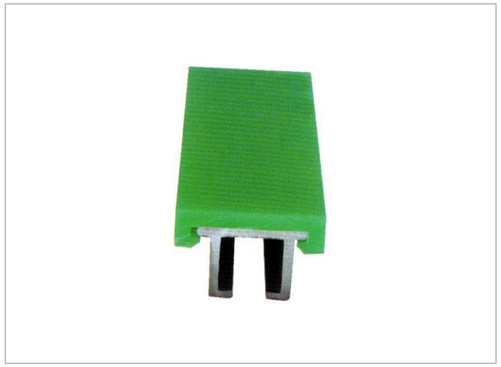

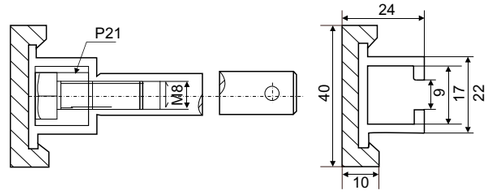

Type	Chain Type	Material	Colour
Guardrail	HS-G5	700,000 molecular weight ultrahigh polyethylene	Green

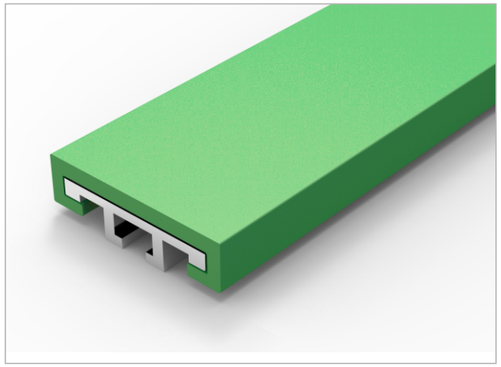

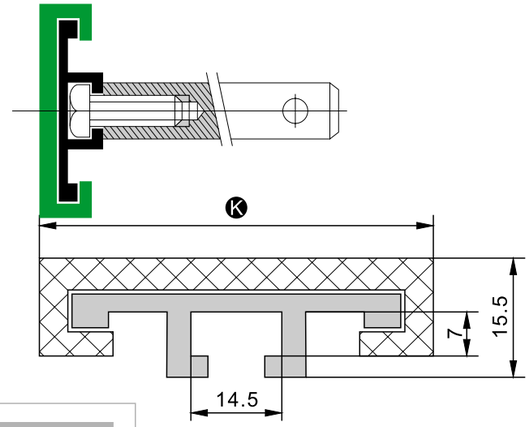

Type	Chain Type	Width(mm)	Material	Colour
Large C guardrail	HS-G7-60	60	700,000 molecular weight ultrahigh polyethylene	Green Black
	HS-G7-100	100		

Guardrail

HONG'S BELT®
Perfect Conveyor Components

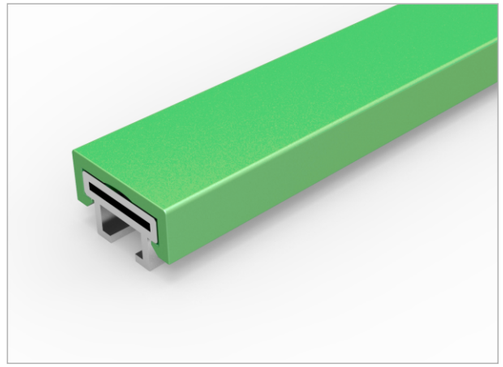

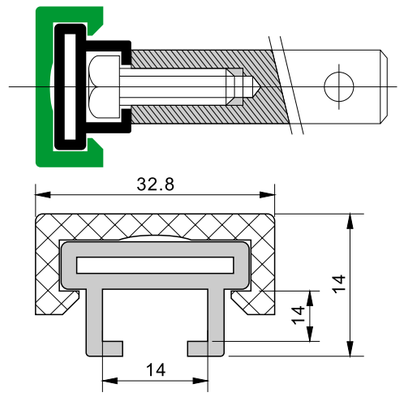

Type	Chain Type	Material	Colour
Parallel guardrail	HS-G8	700,000 molecular weight ultrahigh polyethylene	Green

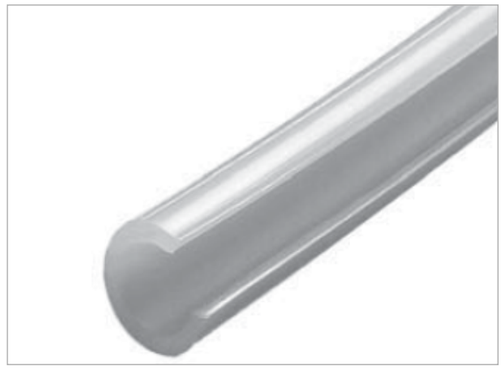

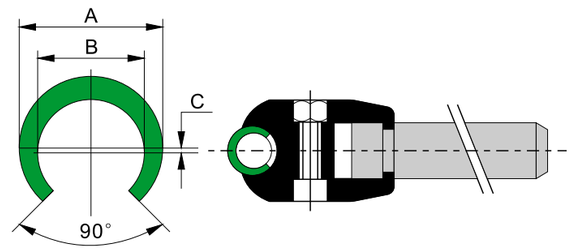

Type	Chain Type	A	B	C	Material	Colour
Small C guardrail	HS-G60A	12	8	0.5	700,000 molecular weight ultrahigh polyethylene	Green Black
	HS-G60B	14	10	0.5		
	HS-G60C	16	12	1.0		
	HS-G60D	20	26	1.5		

Guardrail

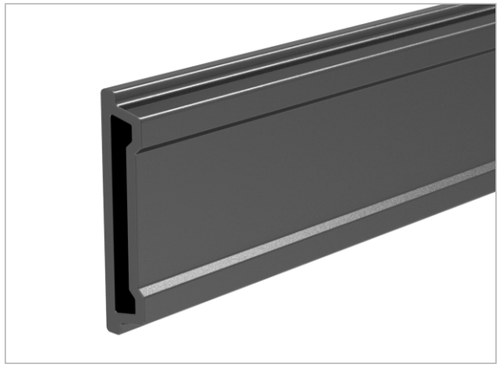

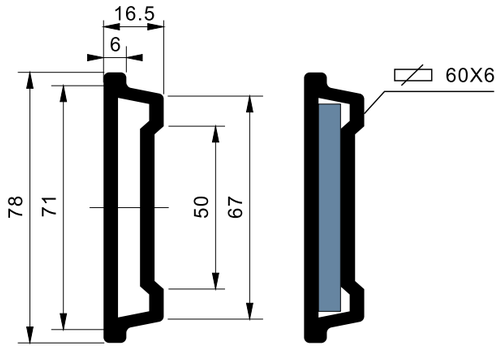

Type	Chain Type	Material	Colour
Medium-sized guardrail	HS-A191	700,000 molecular weight ultrahigh polyethylene	Black



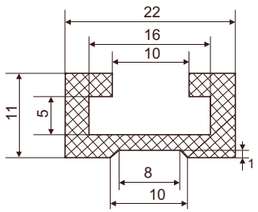

Type	Chain Type	Material	Colour
Guardrail	HS-G14	700,000 molecular weight ultrahigh polyethylene	Green

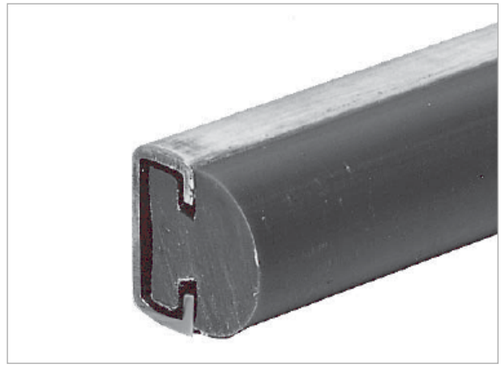

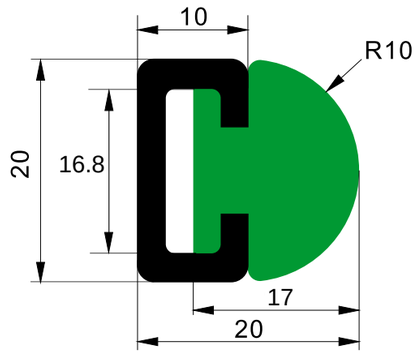

Type	Chain Type	Material	Colour	Kg
Guardrail	HS-G3-70	700,000 molecular weight ultrahigh polyethylene	Green	1.93
	HS-G3-350	3500,000 molecular weight ultrahigh polyethylene		

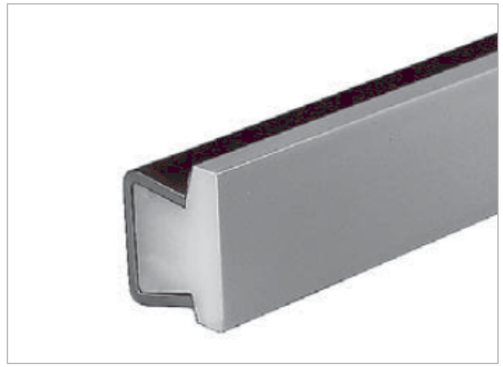

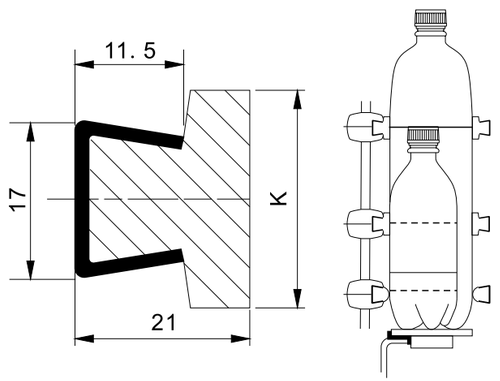

Type	Chain Type	Width	Material	Colour
Ceiling guardrail	HS-G59A-25	25	700,000 molecular weight ultrahigh polyethylene	White
	HS-G59A-31.8	31.8		
	HS-G59A-40	40		
	HS-G59B-25	25	3500,000 molecular weight ultrahigh polyethylene	
	HS-G59B-31.8	31.8		
	HS-G59B-40	40		

Guardrail

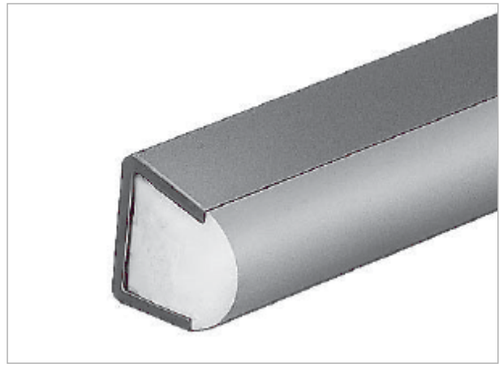

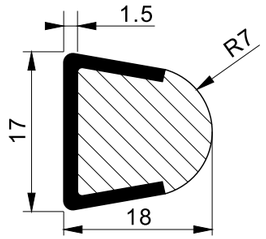

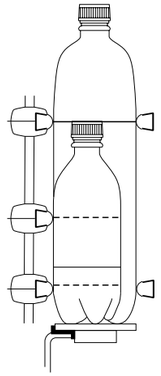

Type	Chain Type	Material	Colour
Round cap guardrail	HS-G58A	700,000 molecular weight ultrahigh polyethylene	White
	HS-G58B	3500,000 molecular weight ultrahigh polyethylene	



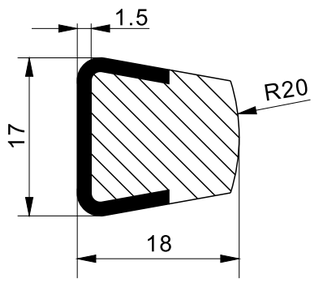

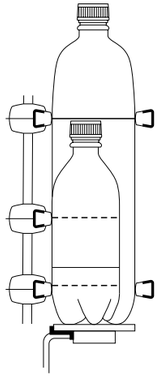

Type	Chain Type	Material	Colour
Round cap guardrail	HS-G56A	700,000 molecular weight ultrahigh polyethylene	White
	HS-G56B	3500,000 molecular weight ultrahigh polyethylene	



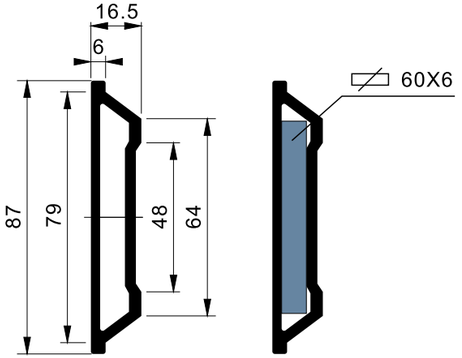

Type	Chain Type	Material	Colour
Medium-sized guardrail	HS-G26	700,000 molecular weight ultrahigh polyethylene	Black

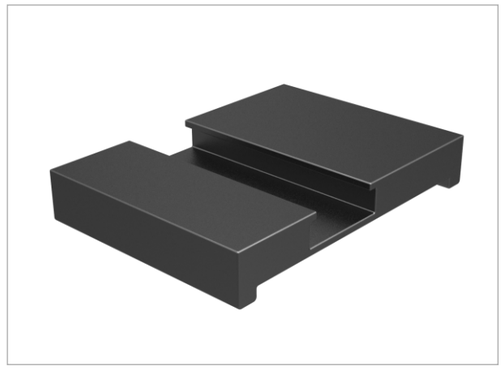

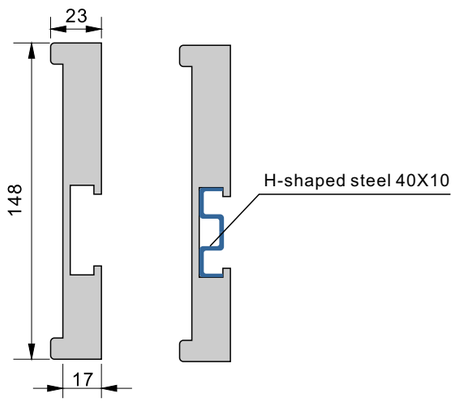

Type	Chain Type	Material	Colour
Large guardrail	HS-G28	700,000 molecular weight ultrahigh polyethylene	Black

Guardrail

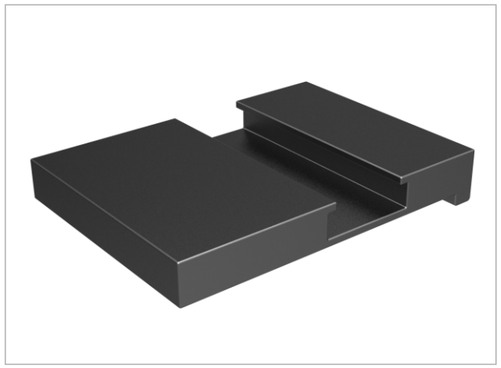

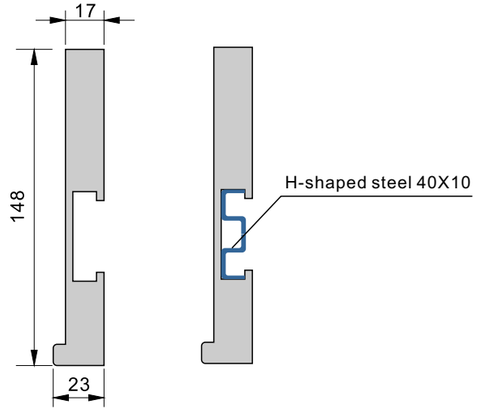

Type	Chain Type	Material	Colour
Large guardrail	HS-G30	700,000 molecular weight ultrahigh polyethylene	Black

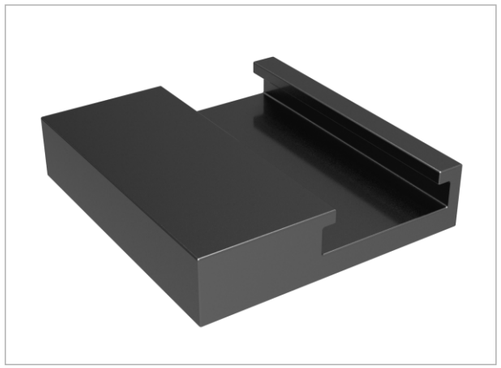

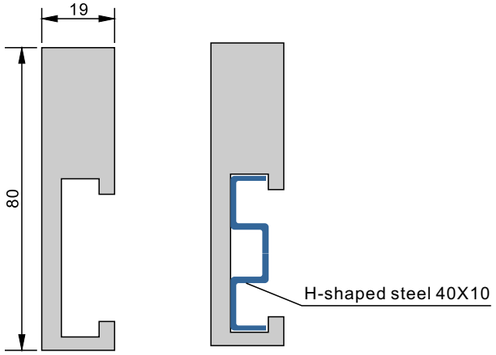

Type	Chain Type	Material	Colour
Medium-sized guardrail	HS-G32	700,000 molecular weight ultrahigh polyethylene	Black

Guardrail

HONG'S BELT®
Perfect Conveyor Components



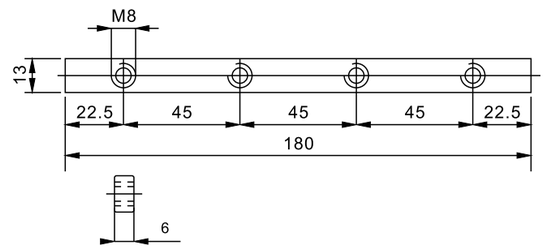

Type	Chain Type	Material
Connecting rod	HS-P6	304 stainless steel

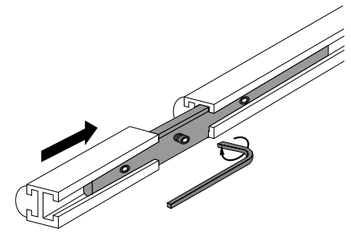

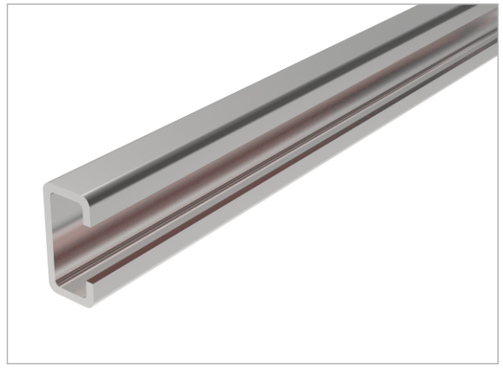

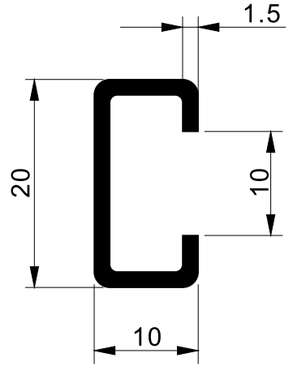

Type	Chain Type	Material	Kg
C-shaped steel	HS-G5	304 stainless steel	1.42

Guardrail

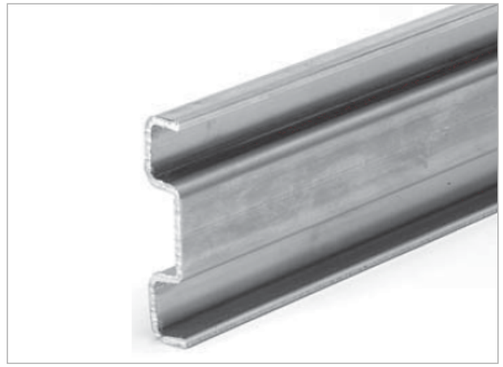

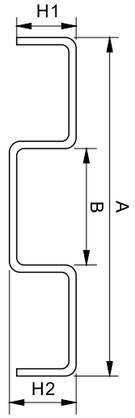

Type	Chain Type	Width A mm	Width B mm	Thickness H1 mm	Thickness H2 mm	Material
H-shaped steel	HS-G40A	40	14	7.5	8	304 stainless steel
	HS-G40B	40	14	9.5	10	



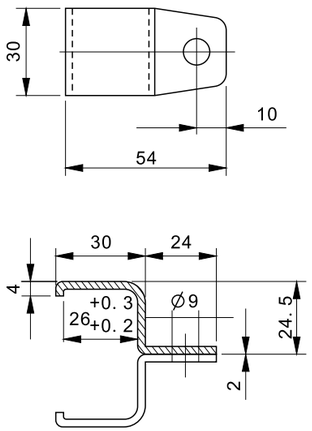

Type	Chain Type	Material
Roller Guide rail clamp	HS-P9	304 stainless steel

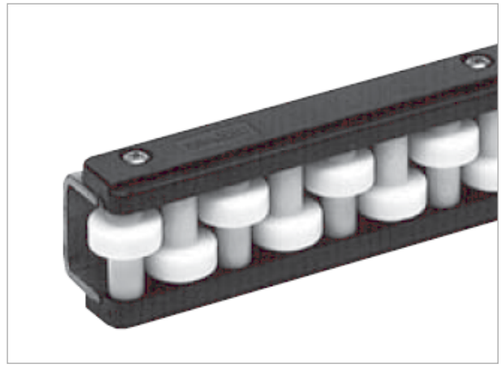

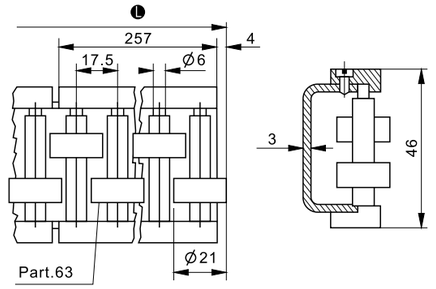

Type	Chain Type	Length L mm
straight roller guardrail	HS-G9	1041/2085/3129



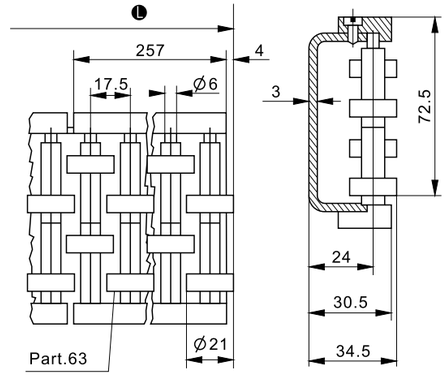

Type	Chain Type	Length L mm
straight roller guardrail	HS-G10	1041/2085/3129

Guardrail



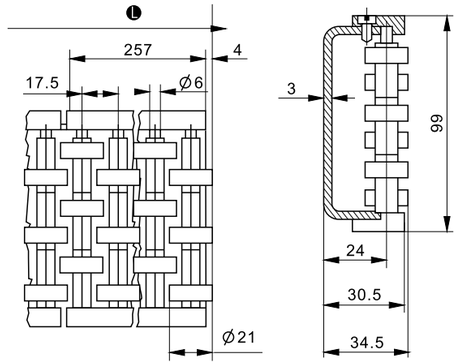

Type	Chain Type	Length L mm
straight roller guardrail	HS-G11	1041/2085/3129

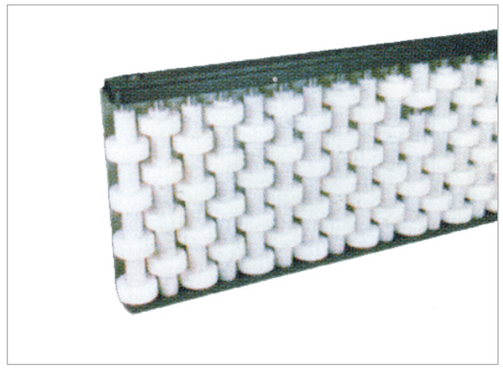

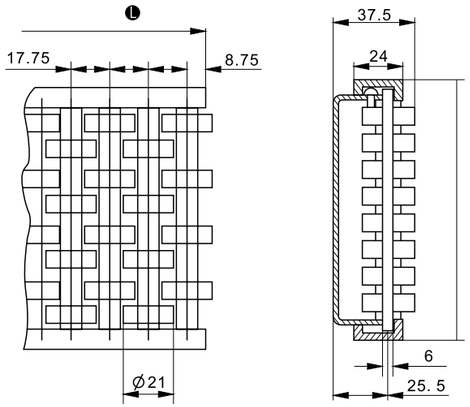

Type	Chain Type	Length L mm
straight roller guardrail	HS-G12	1041/2085/3129



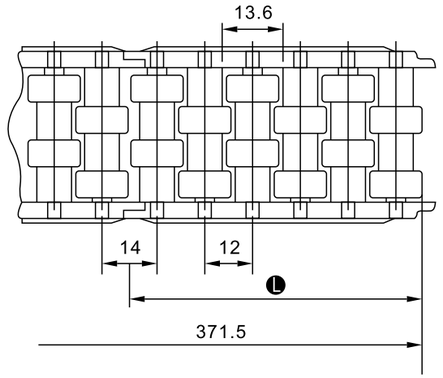

Type	Chain Type	Length L mm
Turning roller guardrail	HS-S9	84

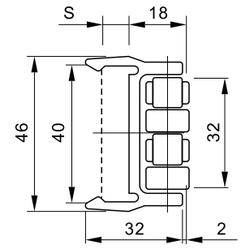

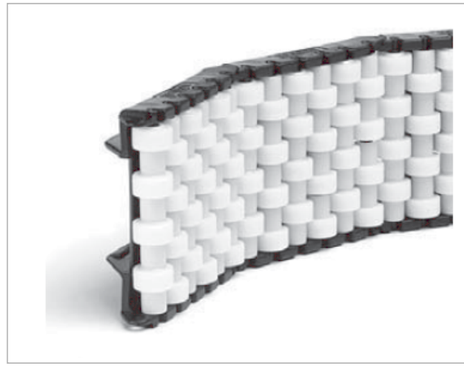

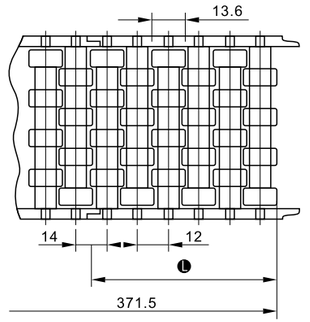

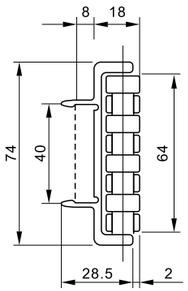

Type	Chain Type	Length L mm
Turning roller guardrail	HS-S10	84



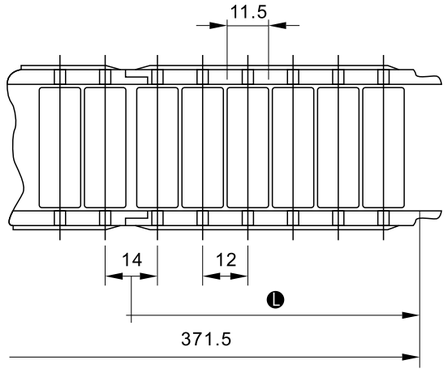

Type	Chain Type	Length L mm
Turning roller guardrail	HS-S11	84

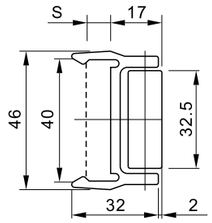



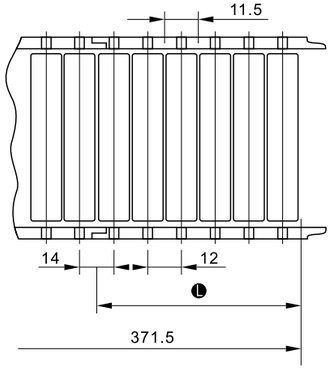

Type	Chain Type	Length L mm
Turning roller guardrail	HS-S12	84

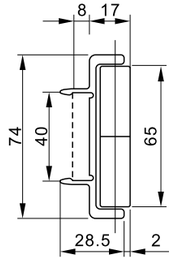



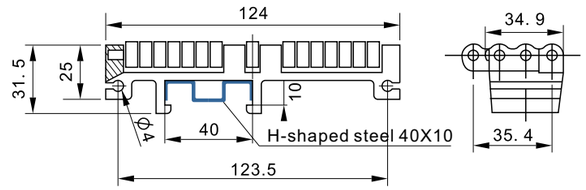

Type	Chain Type	Length L mm
Turning roller guardrail	HS-G82	33

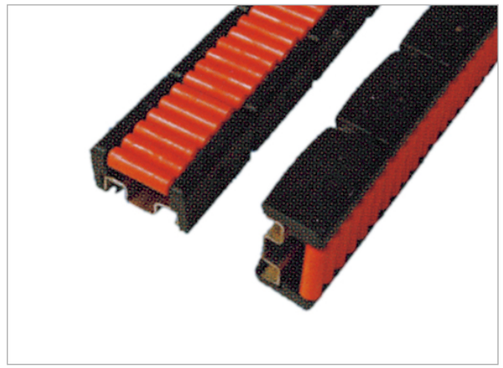

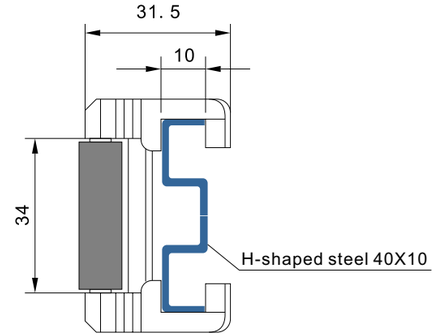

Type	Chain Type	Length L mm
Turning roller guardrail	HS-G80	290

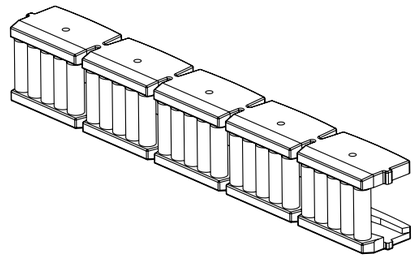

Cushion rail

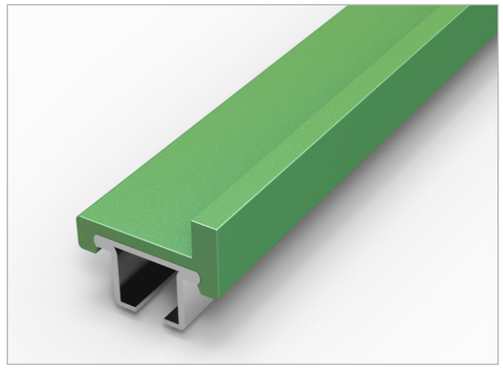

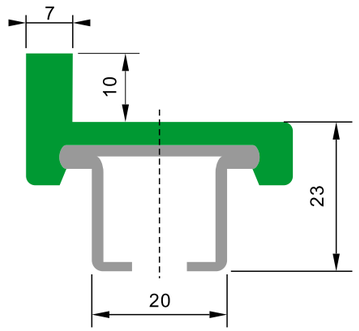

Type	Chain Type	Material	Colour
Side parallel cushion rail	HS-G18A	700,000 molecular weight ultrahigh polyethylene	Green
	HS-G18B	3500,000 molecular weight ultrahigh polyethylene	

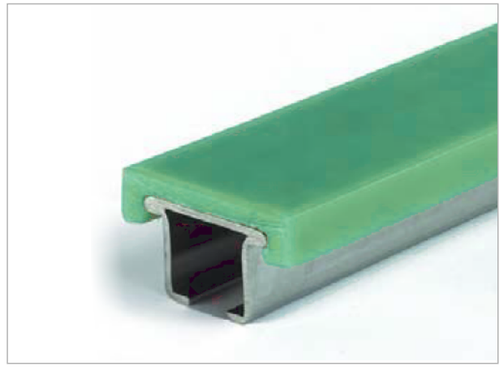

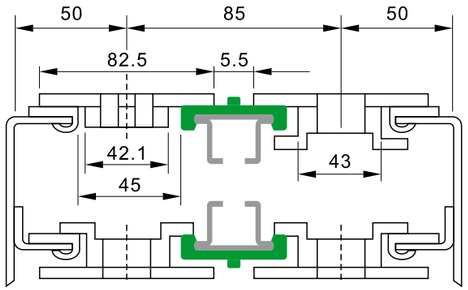

Type	Chain Type	Material	Colour
Flat parallel cushion rail	HS-G19A	700,000 molecular weight ultrahigh polyethylene +304 stainless steel	Green
	HS-G19B	3500,000 molecular weight ultrahigh polyethylene +304 stainless steel	
	HS-G19C	700,000 molecular weight ultrahigh polyethylene +Aluminum alloy	

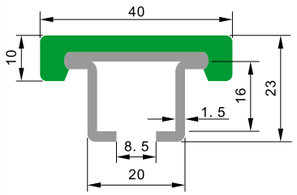

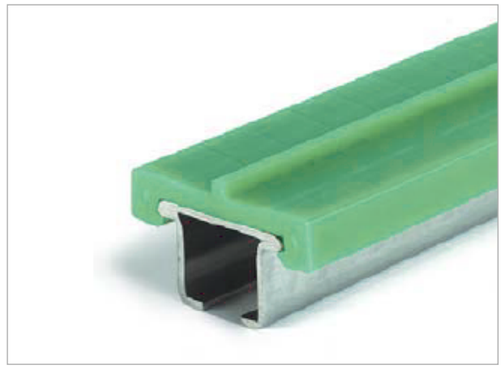

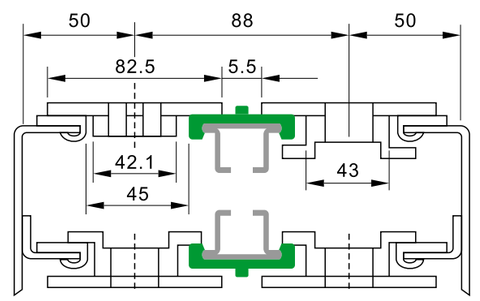

Type	Chain Type	Material	Colour
Double-track parallel cushion rail	HS-G20A	700,000 molecular weight ultrahigh polyethylene	Green
	HS-G20B	3500,000 molecular weight ultrahigh polyethylene	

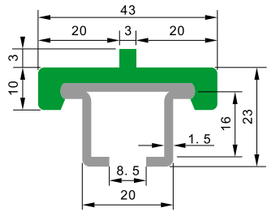

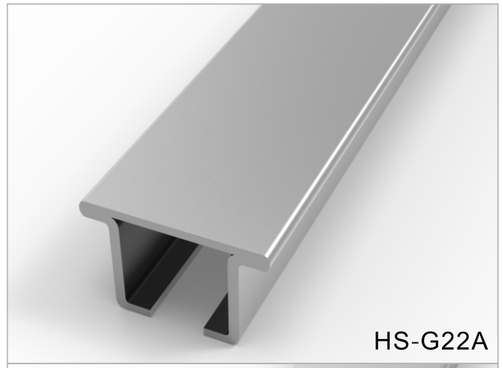

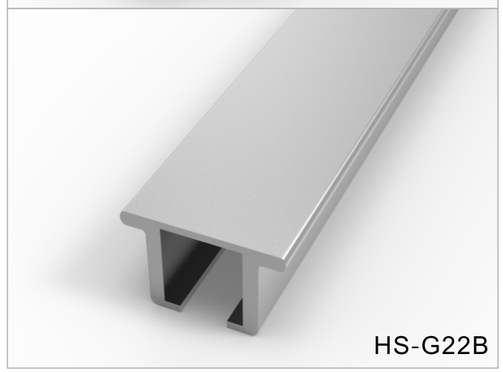

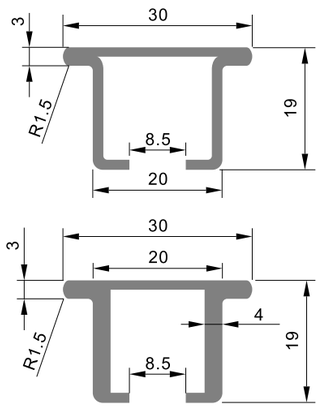

Type	Chain Type	Material	Colour
Parallel cushion rail skeleton	HS-G22A	304 stainless steel	Silvery
	HS-G22B	Aluminum alloy	

Cushion rail



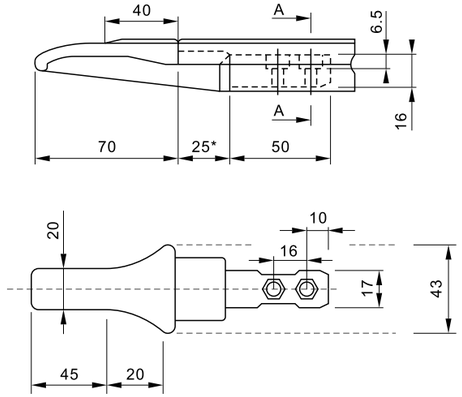

Type	Chain Type	Material	Colour
Flat bar joint	HS-P19	Plastic steel	Black



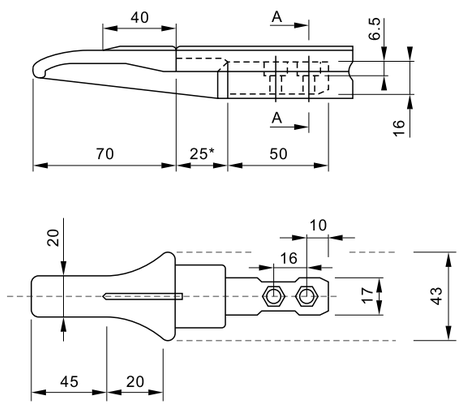

Type	Chain Type	Material	Colour
Flat bar joint	HS-P20	Plastic steel	Black



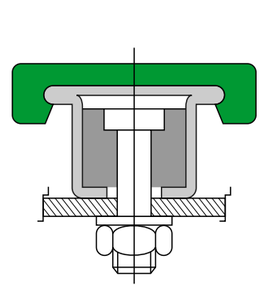

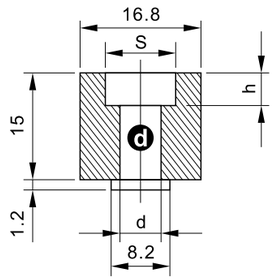

Type	Chain Type	Screw boltl (S)	Material	Colour
Single fixed joint	HS-P21A	M6(304 stainless steel)	Nylon	Black
	HS-P21B	M8(304 stainless steel)		

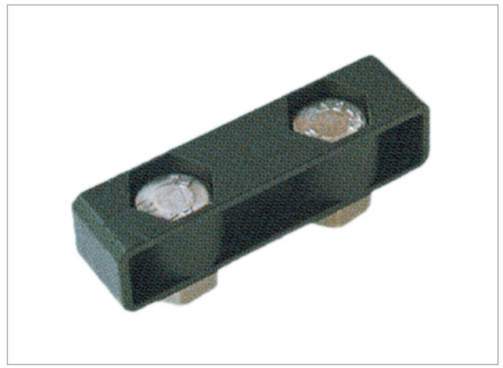

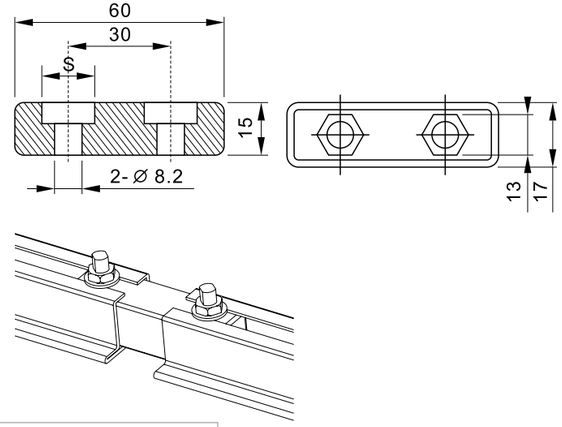

Type	Chain Type	Screw boltl (S)	Material	Colour
Double fixed joints	HS-P22A	M8(304 stainless steel)	Nylon	Black

Cushion rail



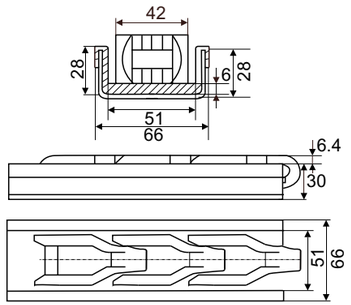

Type	Chain Type	Material	Colour
Case chain straight cushion rail	HS-2600-O	700,000 molecular weight ultrahigh polyethylene	Green

Bottle-hanging strip

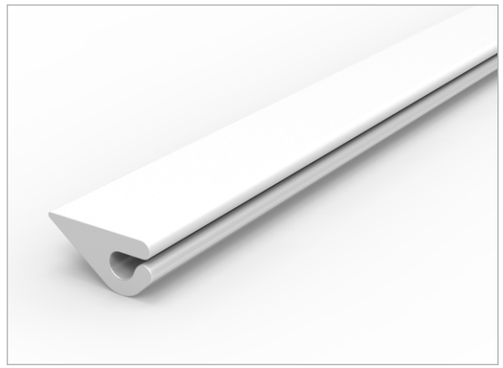

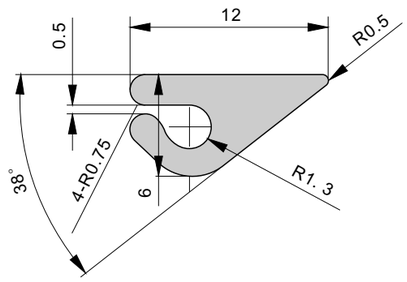

Type	Chain Type	Material	Colour
Bottle-hanging strip	HS-G55	700,000 molecular weight ultrahigh polyethylene	Gray

HONG'S BELT®
Perfect Conveyor Components

Bottle-hanging strip

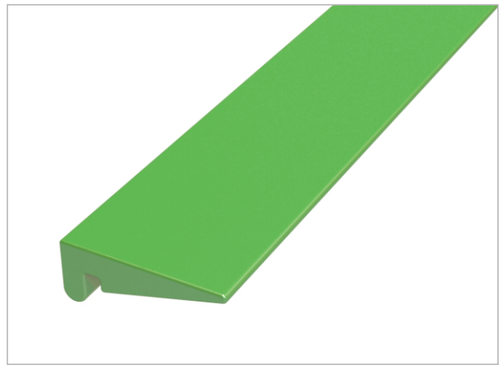

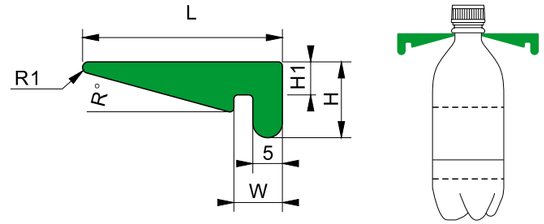

Type	Chain Type	L mm	H mm	H1 mm	W mm	R° Angle	Material	Colour
Bottle-hanging strip	HS-G53A	32	8	5	8	15°	700,000 molecular weight ultrahigh polyethylene	Green
	HS-G53B	32	8	5	8	15°	9000,000 molecular weight ultrahigh polyethylene	
	HS-G53C	32	8	5	8	15°	12000,000 molecular weight ultrahigh polyethylene	Grey blue
	HS-G53D	23	19	6	7.2	30°	12000,000 molecular weight ultrahigh polyethylene	

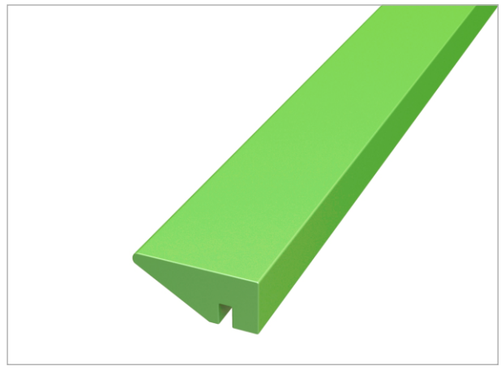

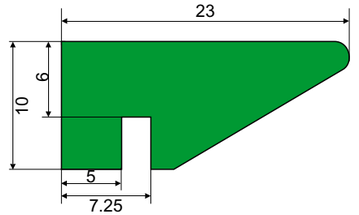

Type	Chain Type	Material	Colour
Bottle-hanging strip	HS-Ex101	700,000 molecular weight ultrahigh polyethylene	Green

Bottle-hanging strip

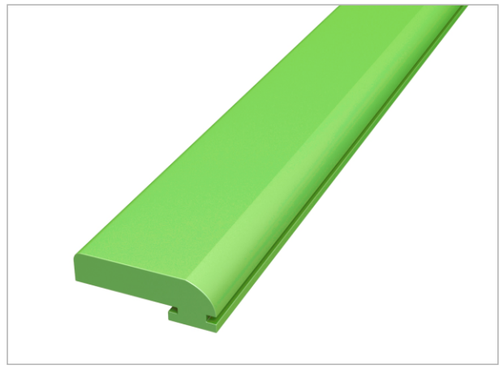

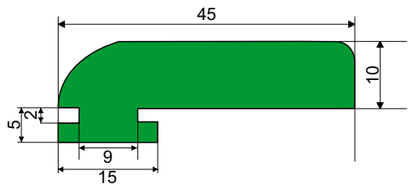

Type	Chain Type	Material	Colour
Bottle-hanging strip	HS-Ex102	700,000 molecular weight ultrahigh polyethylene	Green

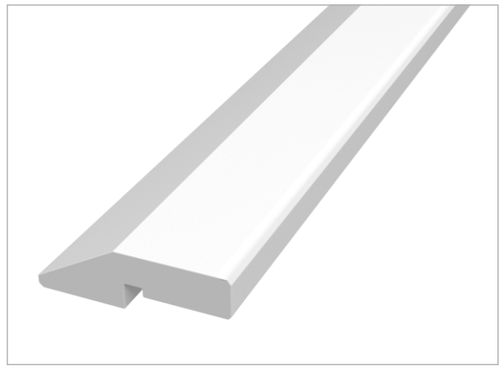

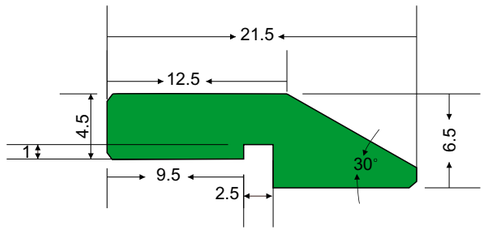

Type	Chain Type	Material	Colour
Bottle-hanging strip	HS-Ex103	700,000 molecular weight ultrahigh polyethylene	White

Heteroideus wearing strip



Type	PB10	PB11	PB12	PB13	PB14	PB15	PB16	PB17	PB18	PB19
w	55	20	35	70	90	140	42	50	50	50
h	8	4	6	5	6	4	3	5	4	3

Type	PB20	PB21	PB22	PB23	PB24	PB25	PB26	PB27	PB28	PB29
w	45	40	70	15	20	50	33	41	112	79
h	3	4	8	6	6	20	10	10	10	10

Ex10

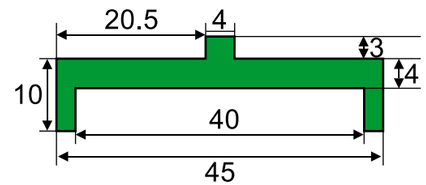

Ex11

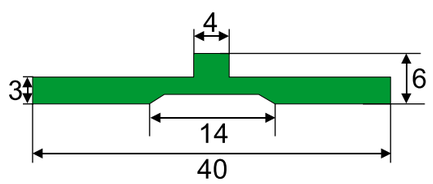

Ex12

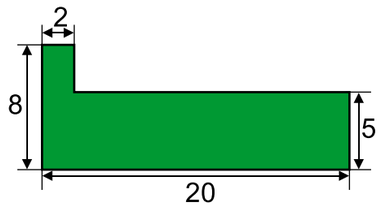

Ex13

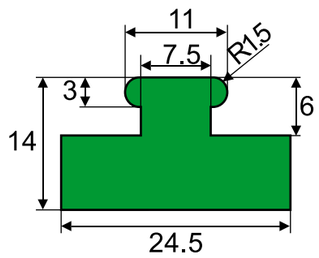

EX14

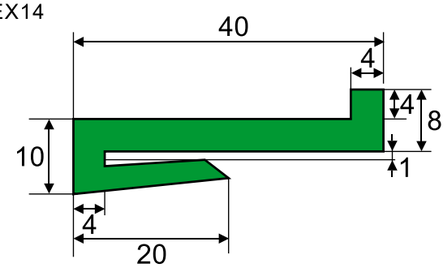

EX15

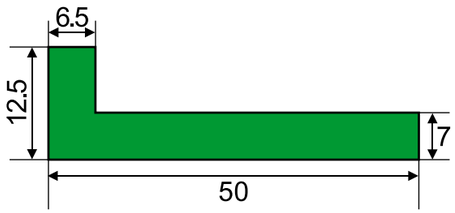

EX16

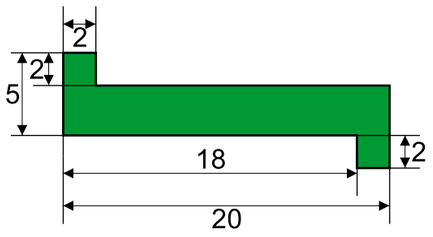

EX17

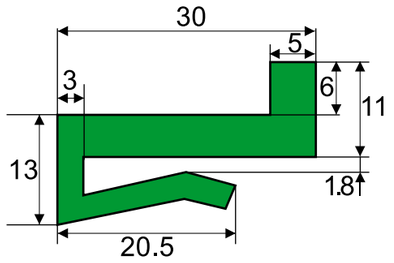

EX18

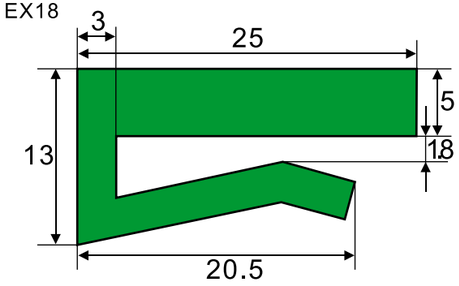

EX19

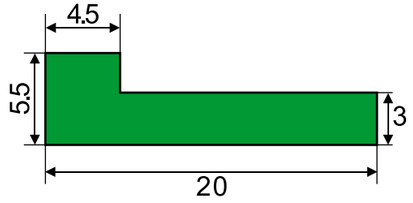

EX20

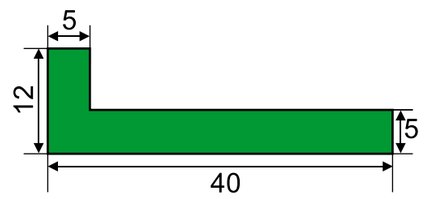

EX21

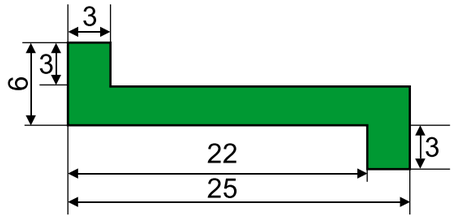

EX22

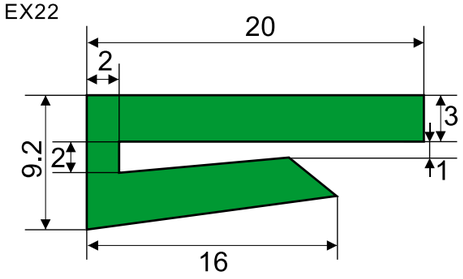

EX23

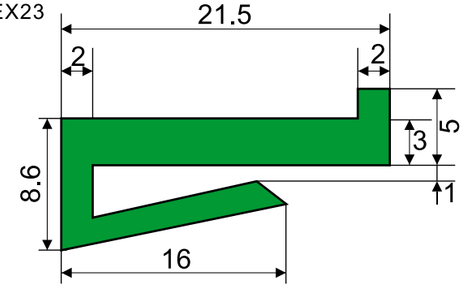

EX24

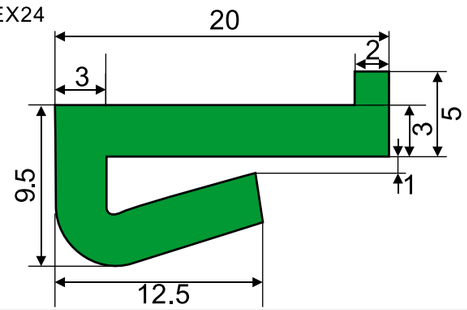

EX25

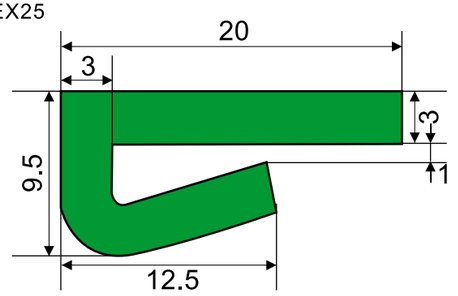

EX26

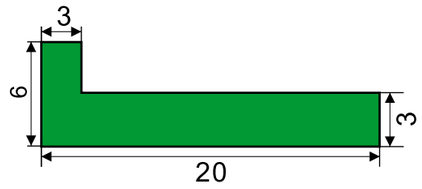

EX27

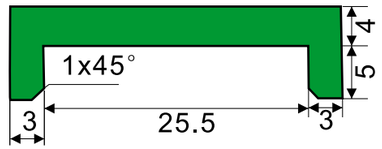

EX28

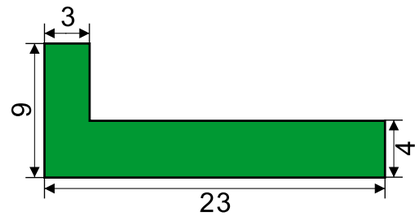

EX29

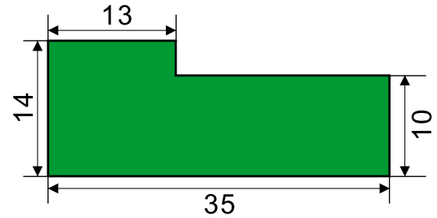

EX30

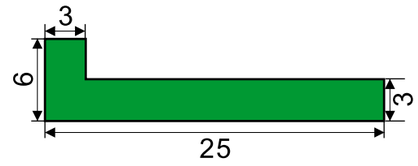

EX31

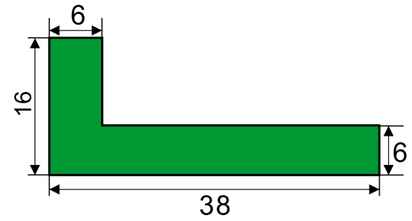

EX32

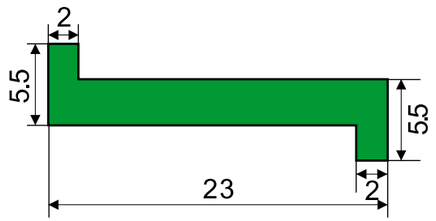

EX33

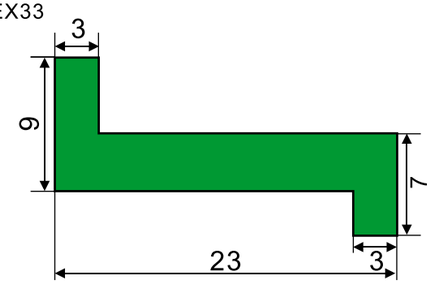

EX34

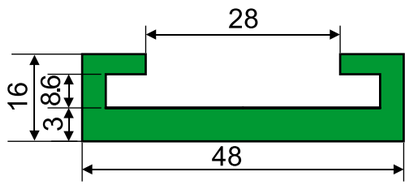

EX35

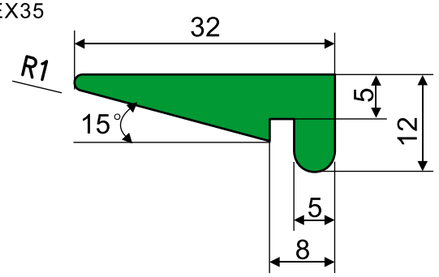

EX36

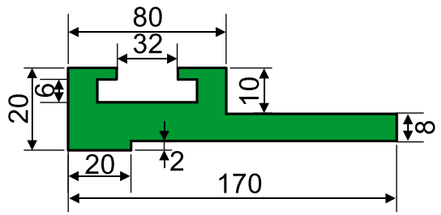

EX37

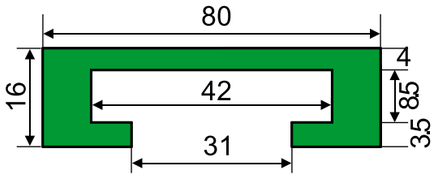

EX38

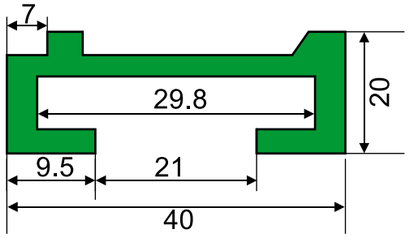

EX39

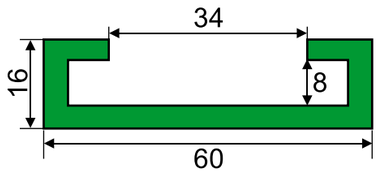

EX40

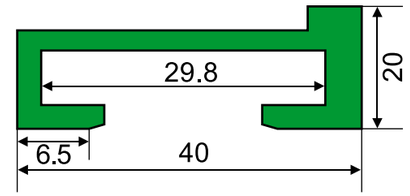

EX41

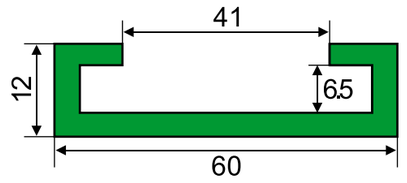

EX42

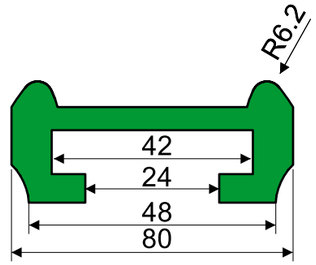

EX43

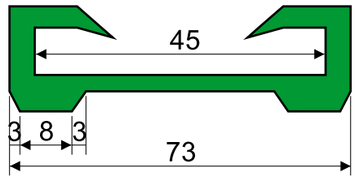

EX44

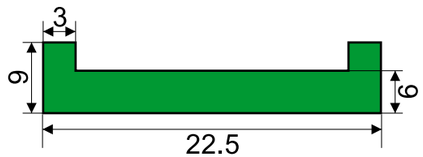

EX45

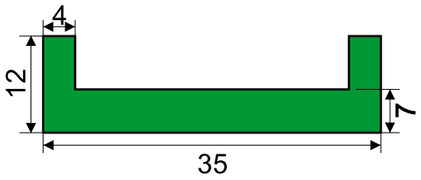

EX46

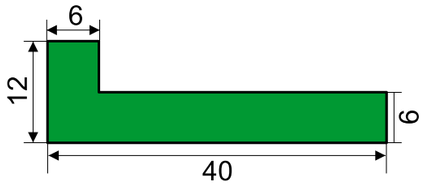

EX47

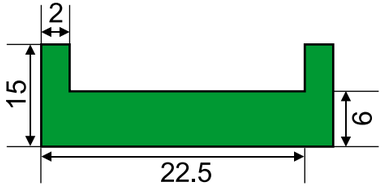

EX48

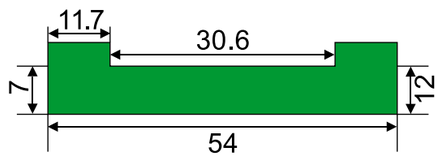

EX49

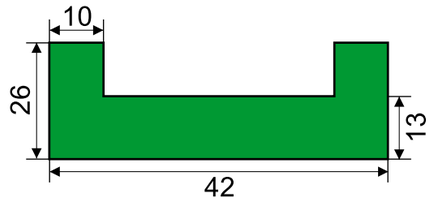

EX50

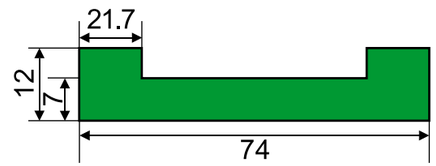

EX51

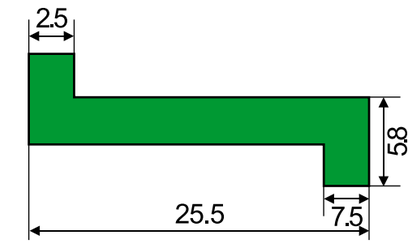

EX52

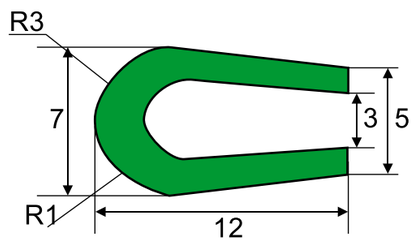

EX53

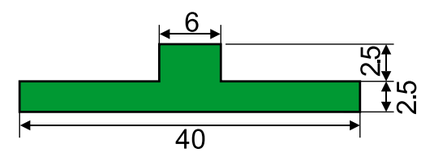

EX54

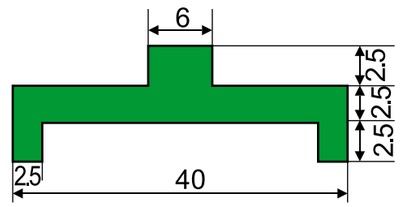

EX55

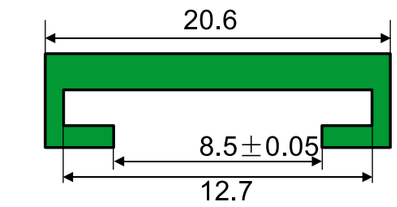

EX56

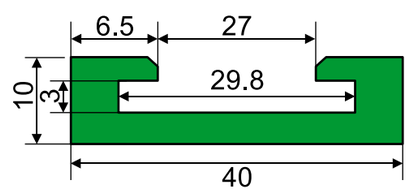

EX57

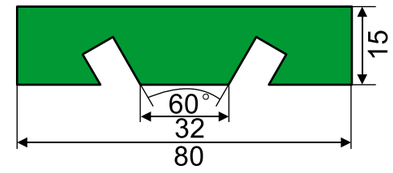

EX58

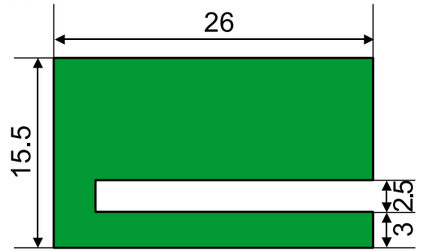

EX59

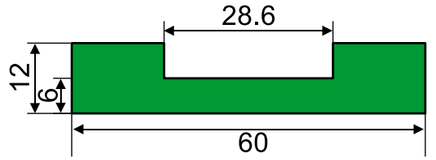

EX60

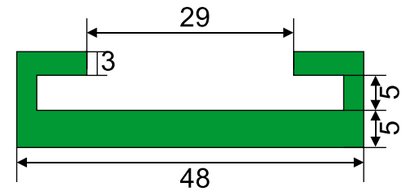

EX61

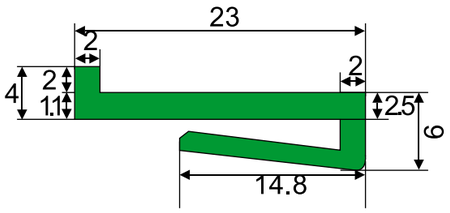

EX62

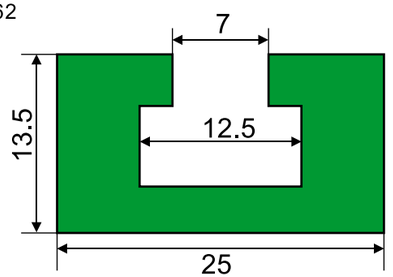

EX63

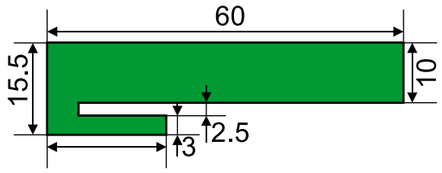

EX64

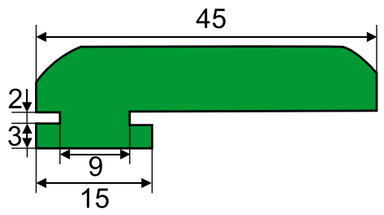

EX65

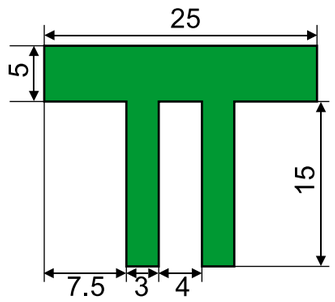

EX66

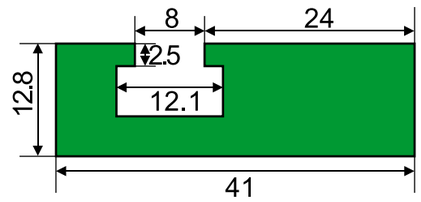

EX67

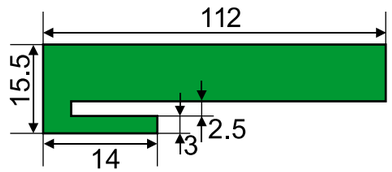

EX68

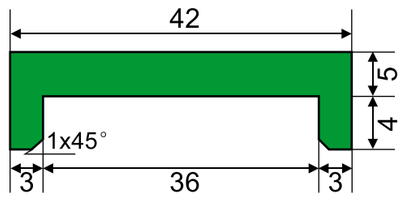

EX69

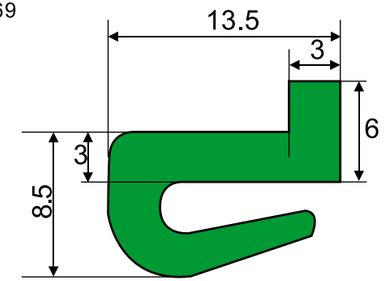

EX70

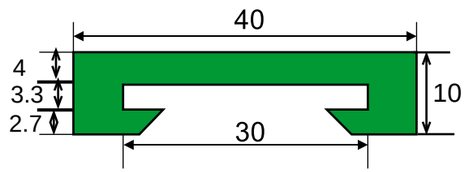

EX71

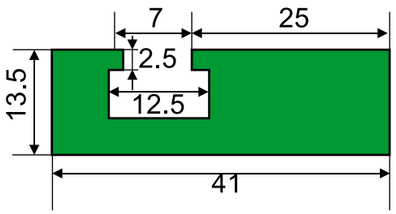

EX72

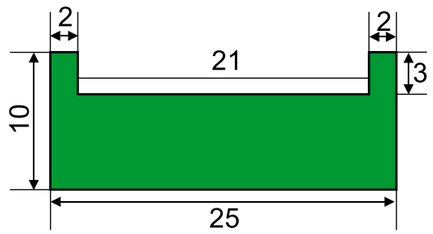

EX73

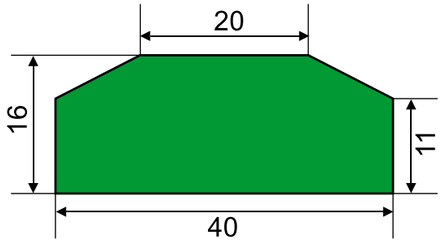

EX74

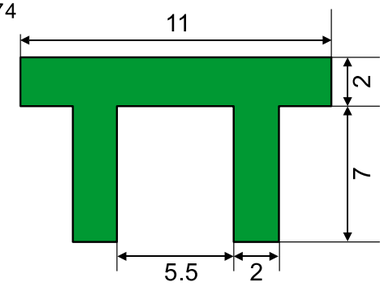

WX75

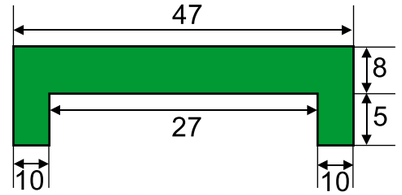

EX76

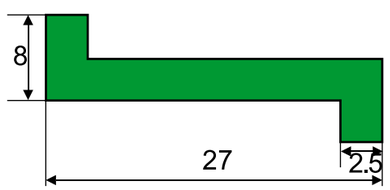

EX77

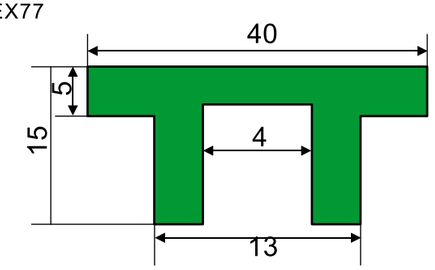

EX78

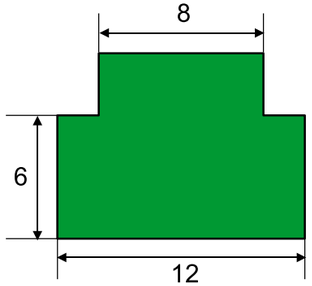

EX79

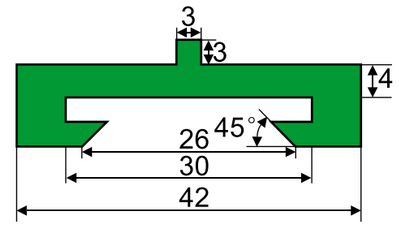

EX80

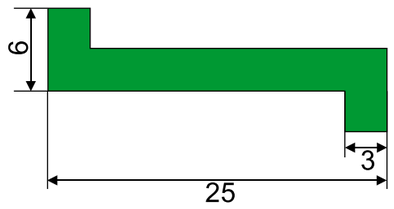

EX81

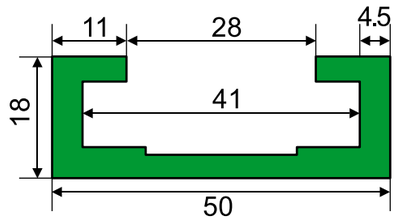

EX82

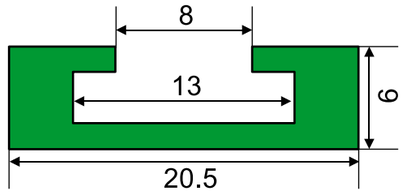

EX83

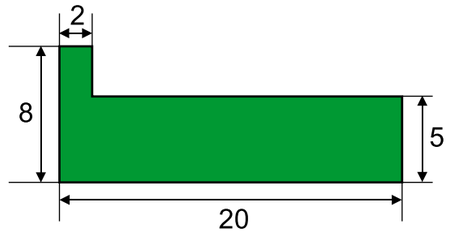

EX84

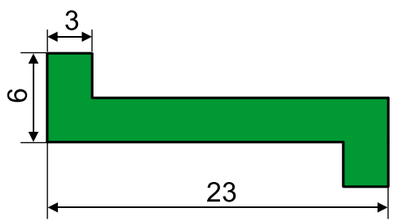

EX85

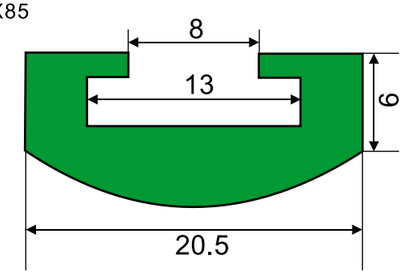

EX86

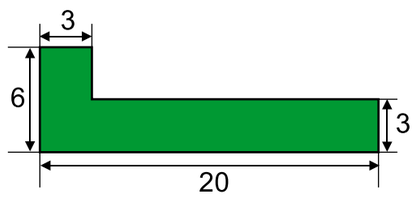

EX87

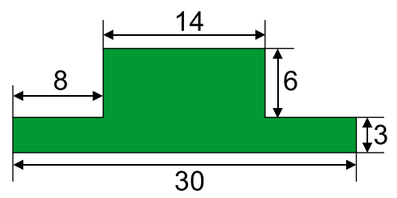

EX88

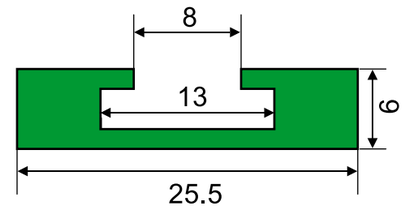

EX89

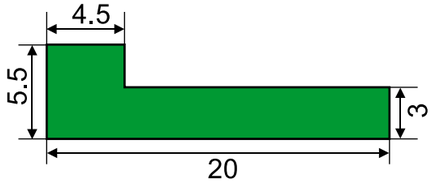

EX90

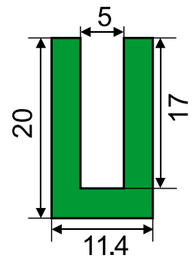

EX91

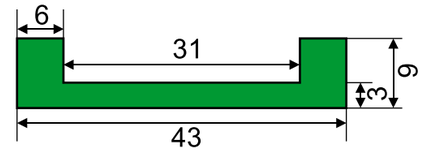

EX92

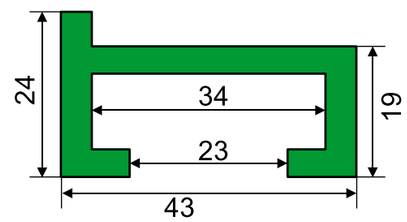

EX93

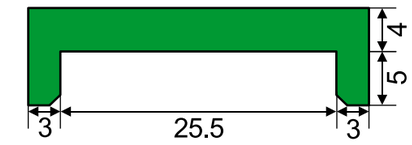

EX94

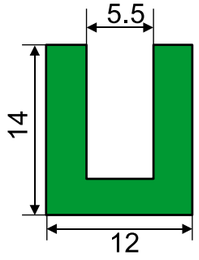

EX95

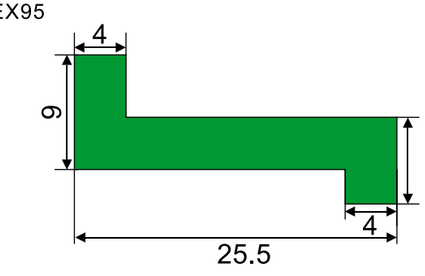

EX96

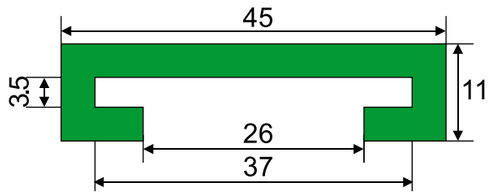

EX97

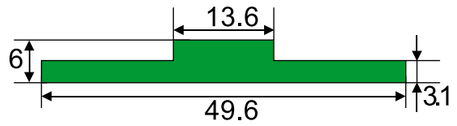

EX98

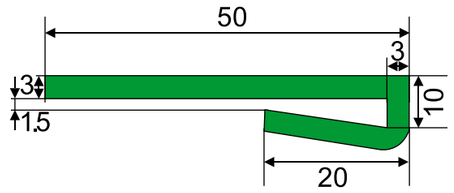

U-shaped mesh belt support

U1

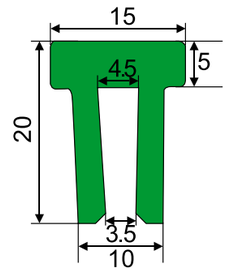

U2

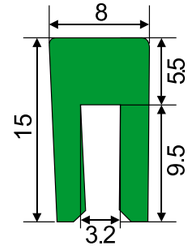

U3

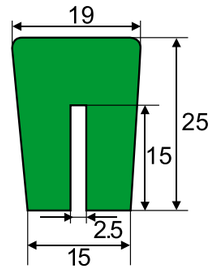

U4

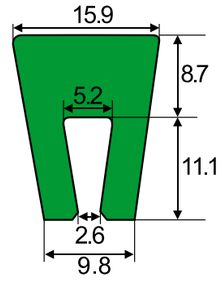

U5

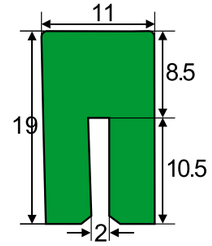

U6

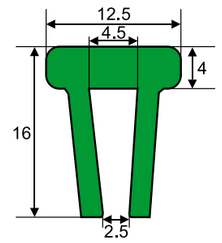

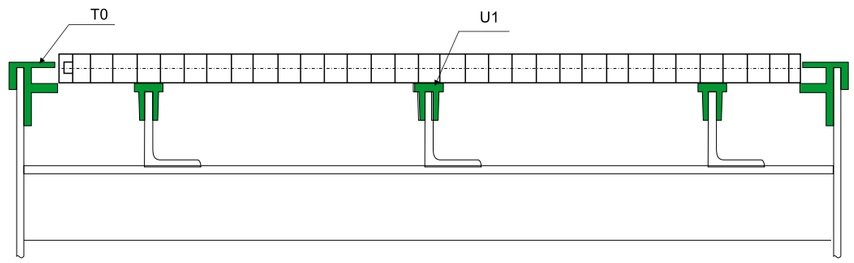

Heteroideus wearing strip

T-shaped mesh belt wing

T0

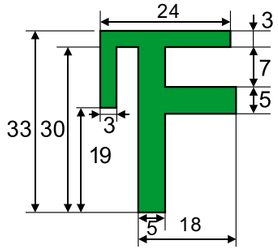

T1

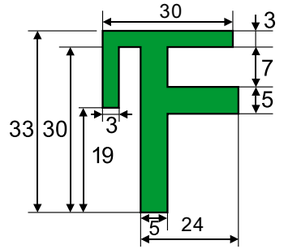

T2

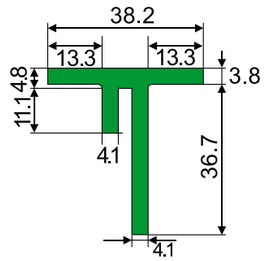

T3

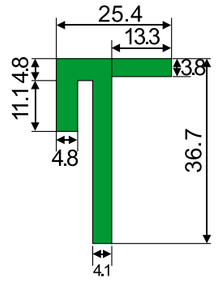

T4

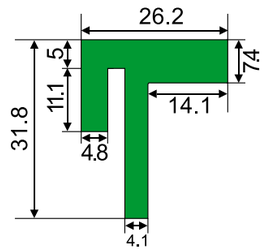

T5

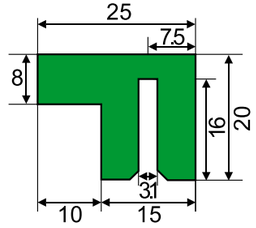

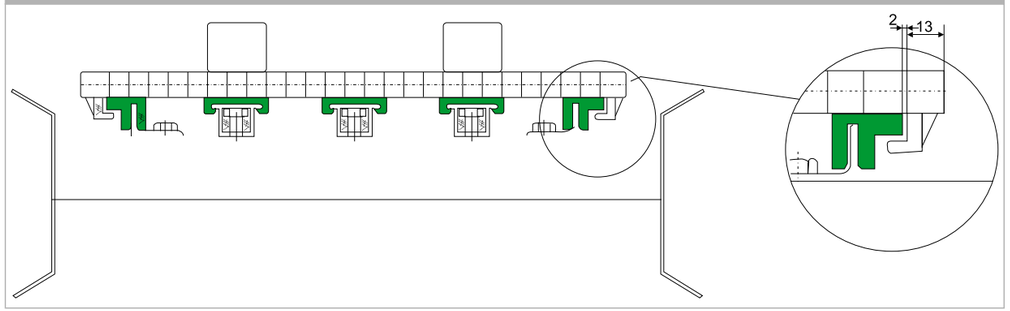

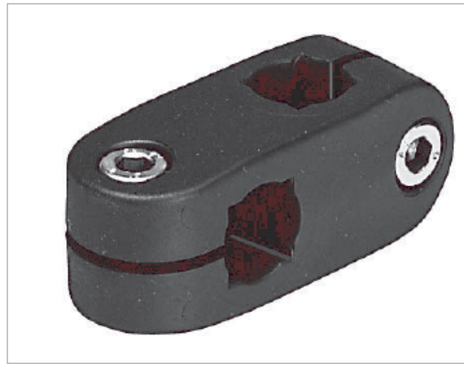

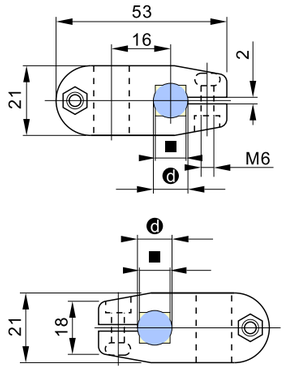

Type	Reference	Square rod ■ mm	d mm	Kg
Light power source supporter A	HS-P101-12	10	12	0.023
	HS-P101-14	12	14	



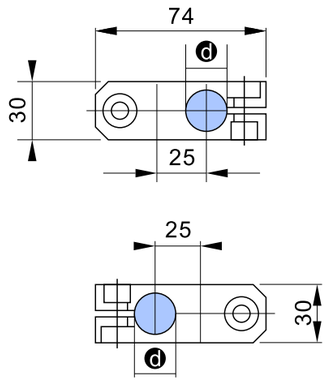

Type	Reference	hole diameter d mm	Kg
Grand cross bearing holder	HS-P103-12	12	0.023
	HS-P103-14	14	
	HS-P103-16	16	



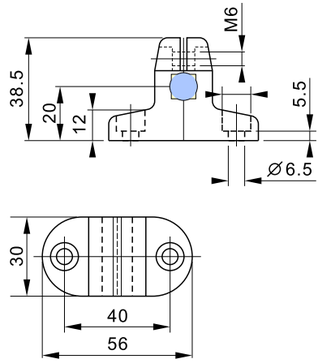

Type	Reference	Square rod ▮ mm	hole diameter ⓓ mm	Kg
Light power source supporter B	HS-P102-12	10	12	0.025
	HS-P102-14	12	14	



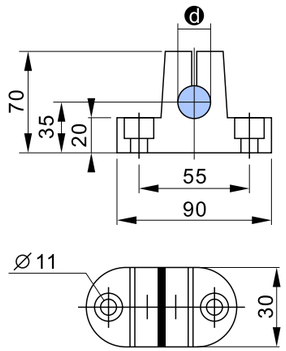

Type	Reference	hole diameter ⓓ mm	Kg
Large T-shaped holder	HS-P104-12	12	0.085
	HS-P104-16	16	
	HS-P104-20	20	



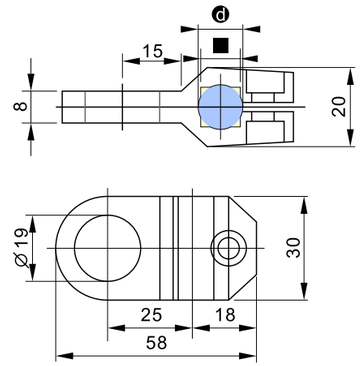

Type	Reference	Square rod ▮ mm	hole diameter ⓓ mm	Kg
Sensor clamp	HS-P105-12	10	12	0.019



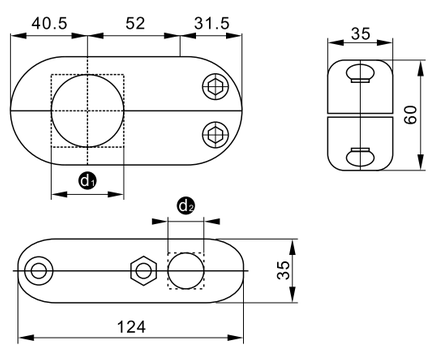

Type	Reference	Square rod ▮ mm	hole diameter ⓓ mm	Kg
Round-hole cross connector	HS-P511-12	38.1	16	0.220
	HS-P511-14	38.1	20	0.205

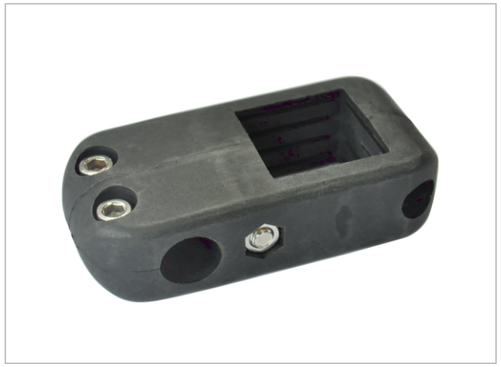

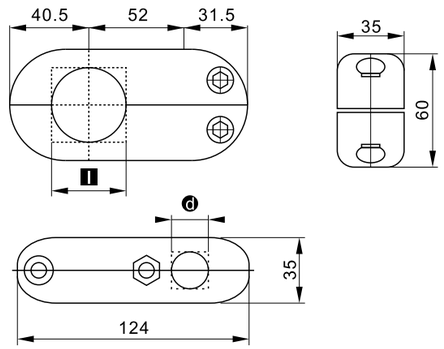

Type	Reference	Square rod l mm	hole diameter d mm	Kg
Square-hole cross connector	HS-P512-16	10	12	0.21
	HS-P512-20	12	14	0.20



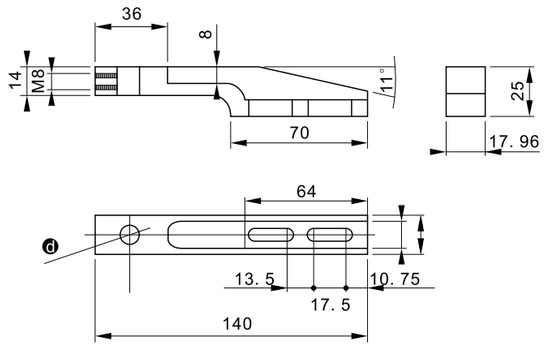

Type	Reference	hole diameter d mm	Kg
Fixed supporter	HS-P200	10	0.08



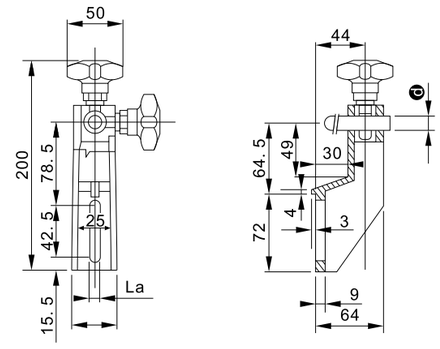

Type	Reference	hole diameter d mm	Kg
Fixed supporter	HS-P201-12	12	0.18
	HS-P201-14	14	
	HS-P201-16	16	



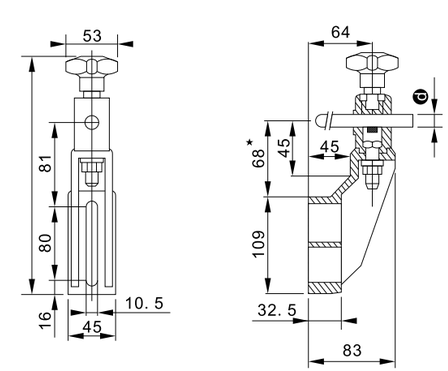

Type	Reference	hole diameter d mm	Kg
Adjustable supporter	HS-P202-12	12	0.26
	HS-P202-14	14	
	HS-P202-16	16	

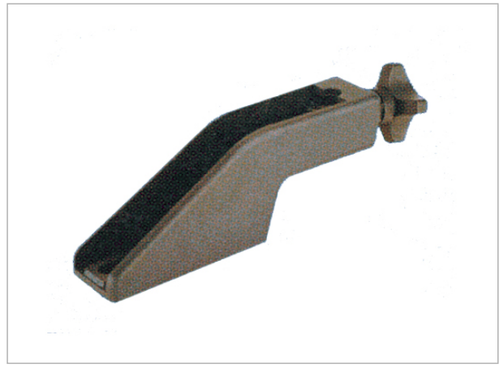

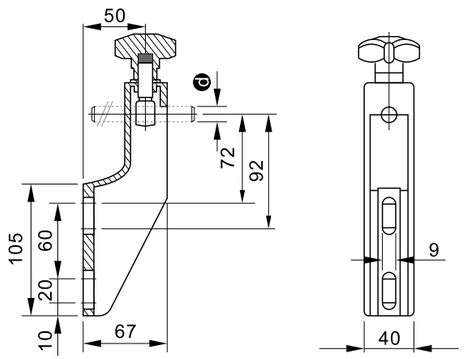

Type	Reference	hole diameter d mm	Kg
Medium-sized fixed supporter	HS-P203-12	12	0.20
	HS-P203-14	14	
	HS-P203-16	16	

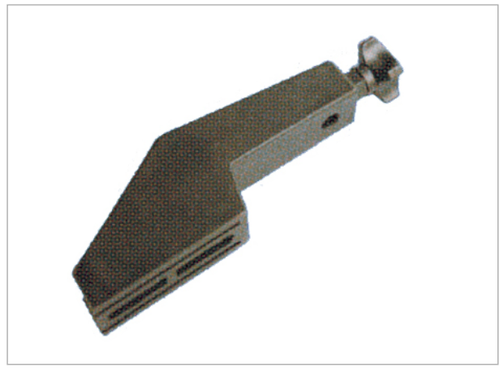

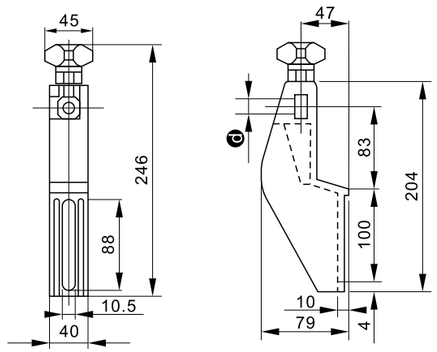

Type	Reference	hole diameter d mm	Kg
Large fixed supporter	HS-P204-12	12	0.25
	HS-P204-14	14	
	HS-P204-16	16	



Type	Reference	Material	Kg
Panel bracket	HS-P205	304 stainless steel	0.149

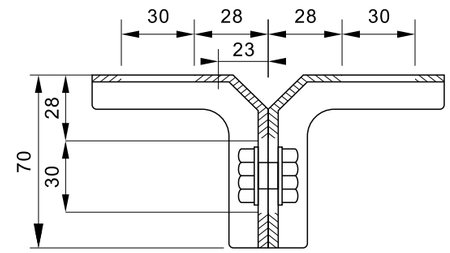

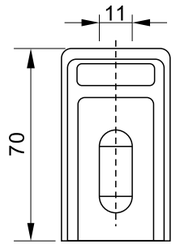

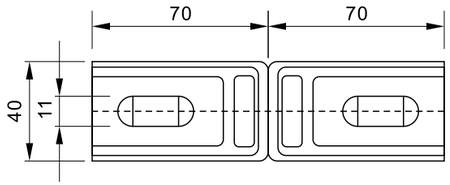

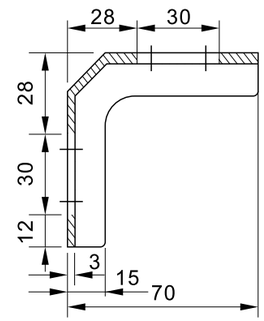



Type	Reference	Material	Kg
Panel bracket	HS-P206-1	304 stainless steel	0.230

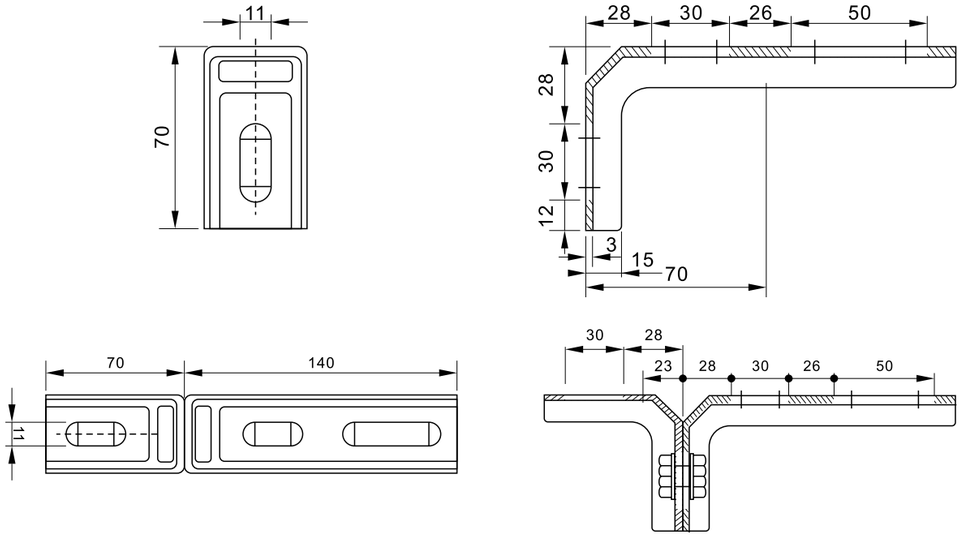

Accessories

HONG'S BELT®
Perfect Conveyor Components



Type	Reference	Material	Kg
Panel bracket	HS-P206-2	304 stainless steel	0.203

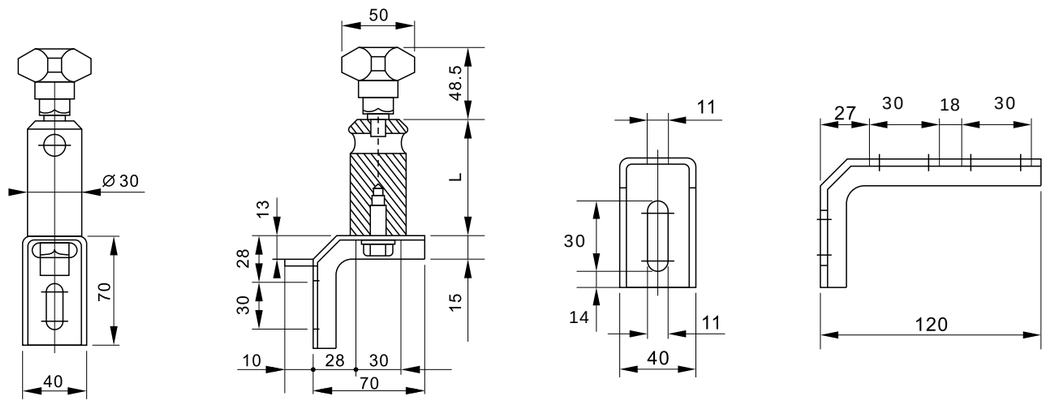



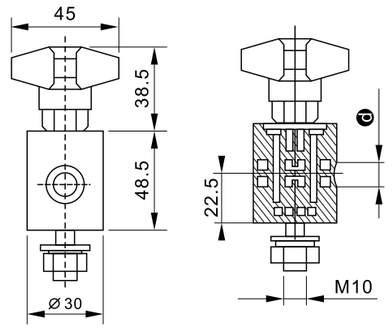

Type	Reference	Material	hole diameter d mm	Kg
Short adjustment head set	HS-P207-12	Pa6 nylon + stainless steel and copper	12	0.056
	HS-P207-14		14	
	HS-P207-16		16	



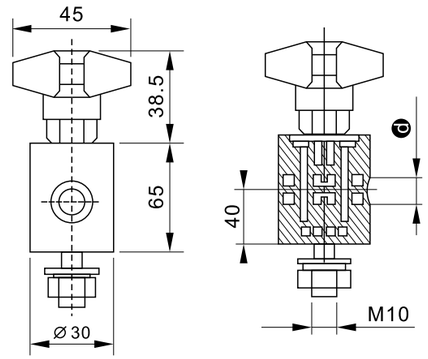

Type	Reference	Material	hole diameter d mm	Kg
Long adjustment head set	HS-P208-12	Pa6 nylon + stainless steel and copper	12	0.143
	HS-P208-14		14	
	HS-P208-16		16	



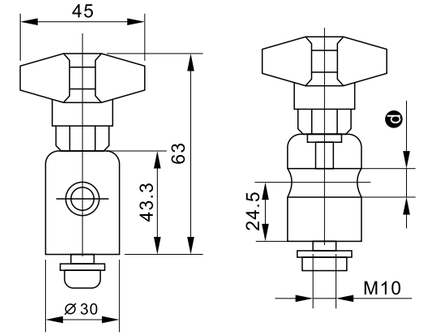

Type	Reference	Material	hole diameter d mm	Kg
Short metal fixed head	HS-P209-12	304 stainless steel	12	0.235
	HS-P209-14		14	
	HS-P209-16		16	



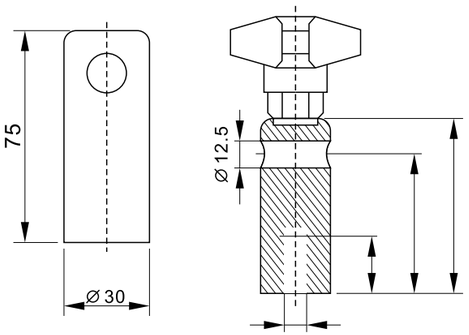

Type	Reference	Material	hole diameter d mm	Kg
Long metal fixed head	HS-P210-1	304 stainless steel	12	0.385
	HS-P210-2		14	
	HS-P210-3		16	



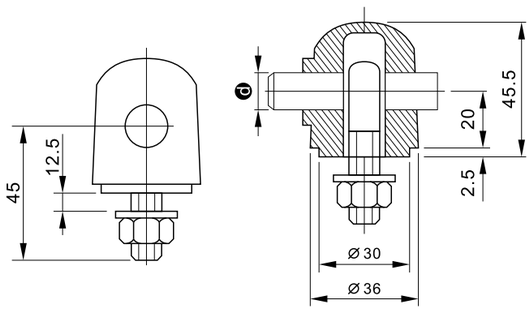

Type	Reference	Material	hole diameter d mm	Kg
Short adjustment head	HS-P211-1	Pa6 Nylon	12	0.07
	HS-P211-2		14	
	HS-P211-3		16	

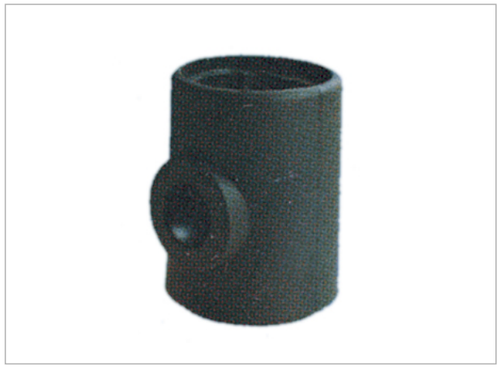

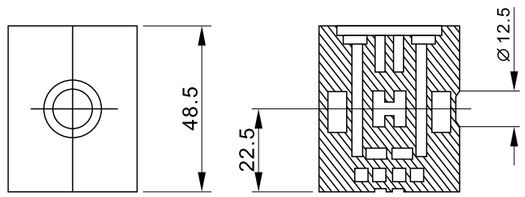

Type	Reference	Material	hole diameter d mm	Kg
Short adjustment head	HS-P212-1	Pa6 Nylon	12	0.03
	HS-P212-2		14	
	HS-P212-3		16	

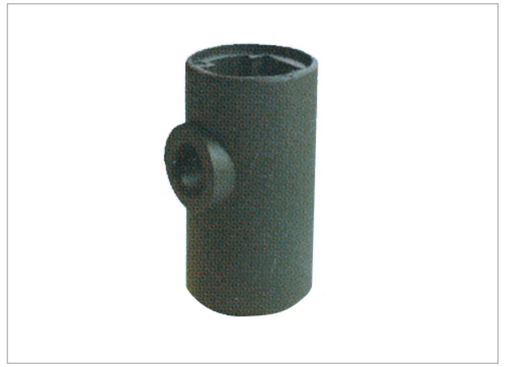

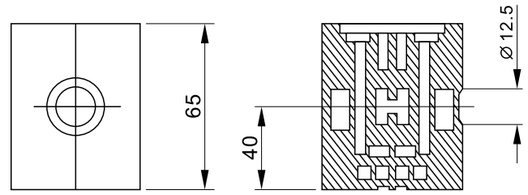

Type	Reference	Material	hole diameter d mm	Kg
Long adjustment head	HS-P213-1	Pa6 Nylon	12	0.035
	HS-P213-2		14	
	HS-P213-3		16	



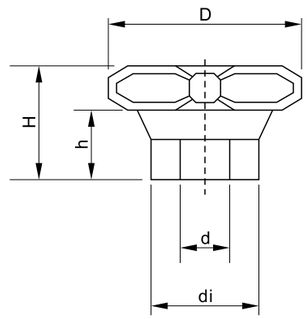

Type	Reference	D	d	H	h	di	Kg
Tightening head	HS-P216-20-N5	20mm	M5	13	7	8.5	0.013
	HS-P216-30-N5	30mm	M5	21	11	17	0.014
	HS-P216-30-N6		M6				0.015
	HS-P216-30-N8		M8				0.016
	HS-P216-40-N6	40mm	M6	25	15	19.5	0.018
	HS-P216-40-N8		M8				0.020
	HS-P216-40-N10		M10				0.024
	HS-P216-48-N8	48mm	M8	37	19	21	0.025
	HS-P216-48-N10		M10				0.025



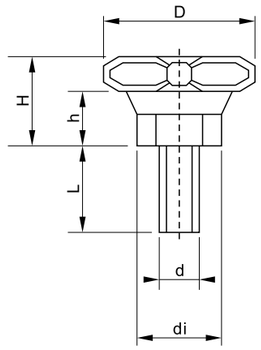

Type	Reference	D	d	L	H	h	di	Kg
Tightening head	HS-P215-20-M4*15	20mm	M4	15	13	7	8.5	0.015
	HS-P215-20-M4*20			20				0.015
	HS-P215-20-M4*25			25				0.015
	HS-P215-20-M5*15		M5	15				0.015
	HS-P215-20-M5*20			20				0.015
	HS-P215-20-M5*25			25				0.015
	HS-P215-30-M5*40	30mm	M5	40	21	11	17	0.010
	HS-P215-30-M6*16		M6	16				0.012
	HS-P215-30-M6*20			20				0.015
	HS-P215-30-M8*20		M8	20				0.018
	HS-P215-30-M8*30			30				0.022
	HS-P215-40-M8*15	40mm	M8	15	25	15	19.5	0.023
	HS-P215-40-M8*20			20				0.030
	HS-P215-40-M10*20		M10	20				0.040
	HS-P215-40-M10*30			30				0.045
	HS-P215-48-M8*25	48mm	M8	25	32	19	21	0.047
	HS-P215-48-M10*25		M10	25				0.050
	HS-P215-48-M10*30			30				0.055



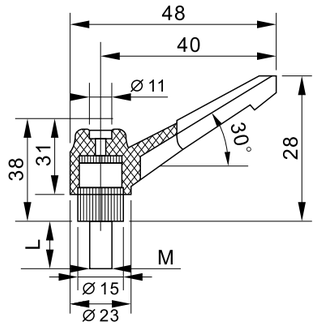

Type	Reference	M	L	Kg	Material
Small universal wrench	HS-P230-W4*14	4	14	0.023	Strengthened nylon(PA66) handle and stainless screws(SUS304)
	HS-P230-W4*20		20	0.025	
	HS-P230-W5*20	5	20	0.028	
	HS-P230-W6*20	6	20	0.030	
	HS-P230-W6*25		25	0.030	



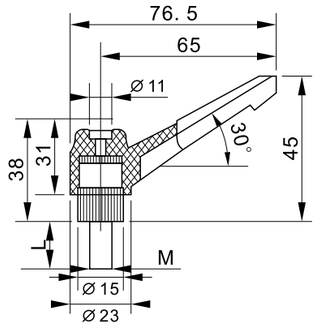

Type	Reference	M	L	Kg	Material
Large universal wrench	HS-P240-W8*20	8	20	0.035	Strengthened nylon(PA66) handle and stainless screws(SUS304)
	HS-P240-W8*30		30	0.040	
	HS-P240-W8*50		50	0.050	
	HS-P240-W10*30	10	30	0.056	
	HS-P240-W10*60		60	0.080	



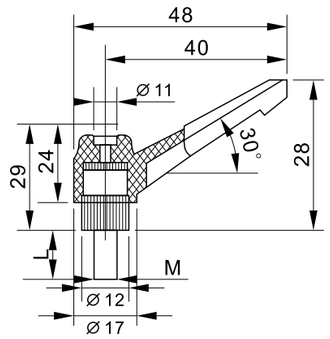

Type	Reference	M	L	Kg	Material
Internal crest small universal wrench	HS-P250-W-N4	4	10	0.020	Strengthened nylon handle (PA66)
	HS-P250-W-N5	5	10	0.025	
	HS-P250-W-N6	6	10	0.030	



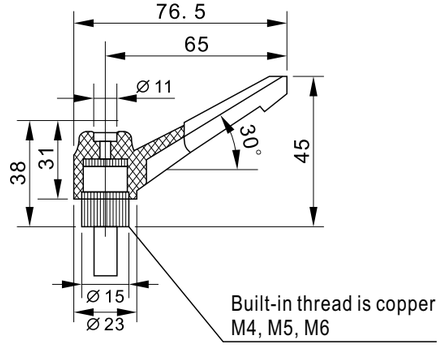

Type	Reference	M	L	Kg	Material
Internal crest large universal wrench	HS-P260-W-N8	8	15	0.030	Strengthened nylon handle (PA66)
	HS-P260-W-N10	10	15	0.040	



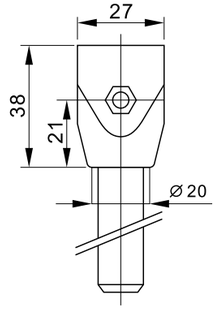

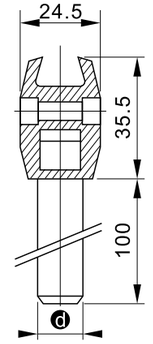

Type	Reference	Material	hole diameter d mm	Kg
Single clamp	HS-P300-12	Pa6 Nylon+ 304 stainless steel	12	0.11
	HS-P300-14		14	
	HS-P300-16		16	



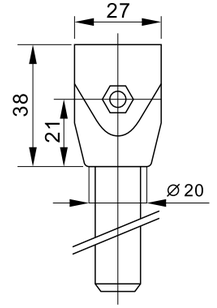

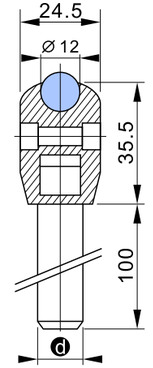

Type	Reference	Material	hole diameter d mm	Kg
Single clamp	HS-P301-12	Pa6 Nylon+ 304 stainless steel	12	0.11
	HS-P301-14		14	
	HS-P301-16		16	

Accessories



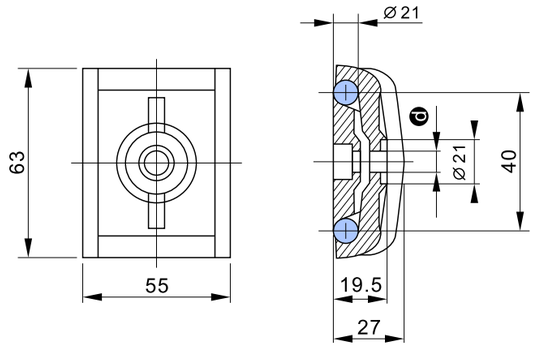

Type	Reference	Material	hole diameter d mm	Kg
Double clamp A	HS-P302-12	Pa6 Nylon+ 304 stainless steel	12	0.17
	HS-P302-14		14	
	HS-P302-16		16	



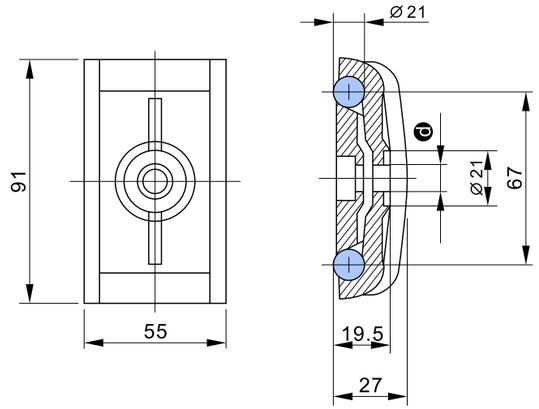

Type	Reference	Material	hole diameter d mm	Kg
Double clamp B	HS-P303-12	Pa6 Nylon+ 304 stainless steel	12	0.18
	HS-P303-14		14	
	HS-P303-16		16	



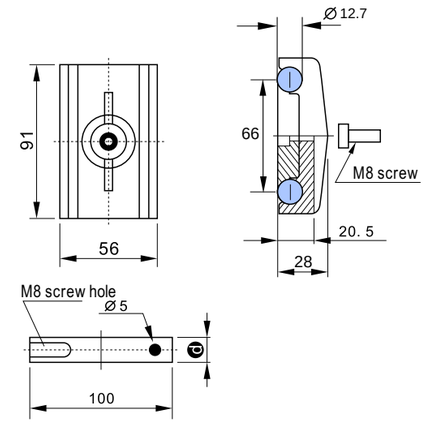

Type	Reference	Material	hole diameter d mm	Kg
Double clamp E	HS-P310-12	Pa6 Nylon+ 304 stainless steel	12	0.18
	HS-P310-14		14	
	HS-P310-16		16	



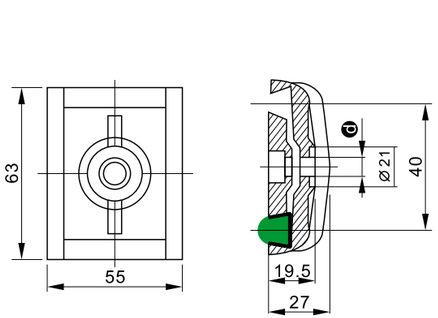

Type	Reference	Material	hole diameter d mm	Kg
Double clamp C	HS-P307-12	Pa6 Nylon+ 304 stainless steel	12	0.16
	HS-P307-14		14	
	HS-P307-16		16	



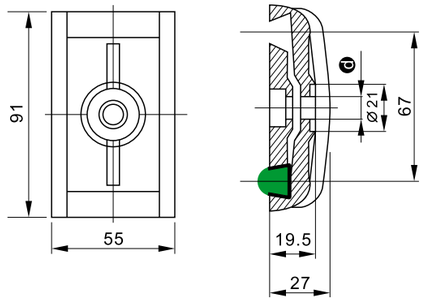

Type	Reference	Material	hole diameter d mm	Kg
Double clamp D	HS-P308-12	Pa6 Nylon+ 304 stainless steel	12	0.18
	HS-P308-14		14	
	HS-P308-16		16	

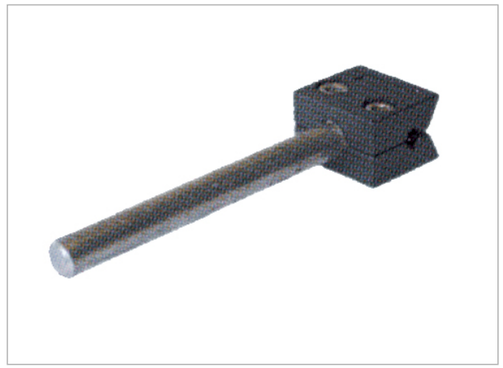

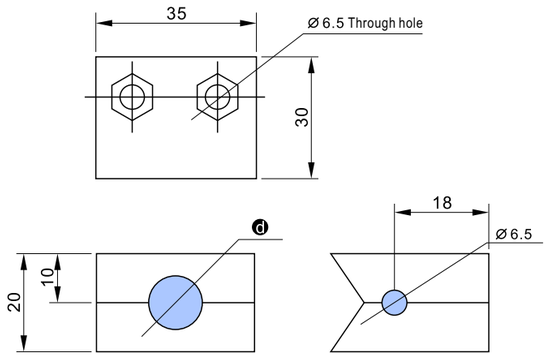

Type	Reference	Material	hole diameter d mm	Kg
Square clamp D	HS-P304-12	Pa6 Nylon+ 304 stainless steel	12	0.11
	HS-P304-14		14	
	HS-P304-16		16	



Type	Reference	Material	hole diameter d mm	Kg
Adjustable single clamp A	HS-P305-12	Pa6 Nylon+ 304 stainless steel	12.0	0.045
	HS-P305-12.7		12.7	

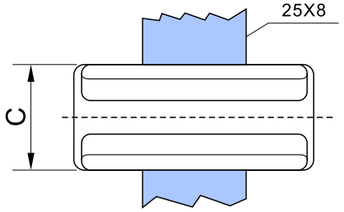

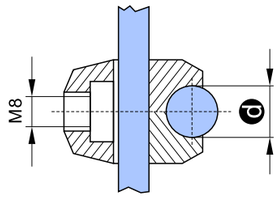

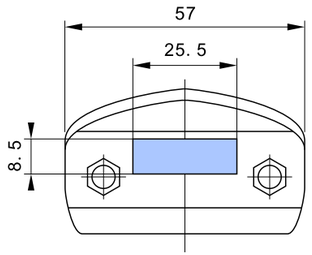



名称 Type	规格 Reference	材质 Material	自重 Kg
djustable single clamp B	HS-P306	Pa6 Nylon+ 304 stainless steel	0.04

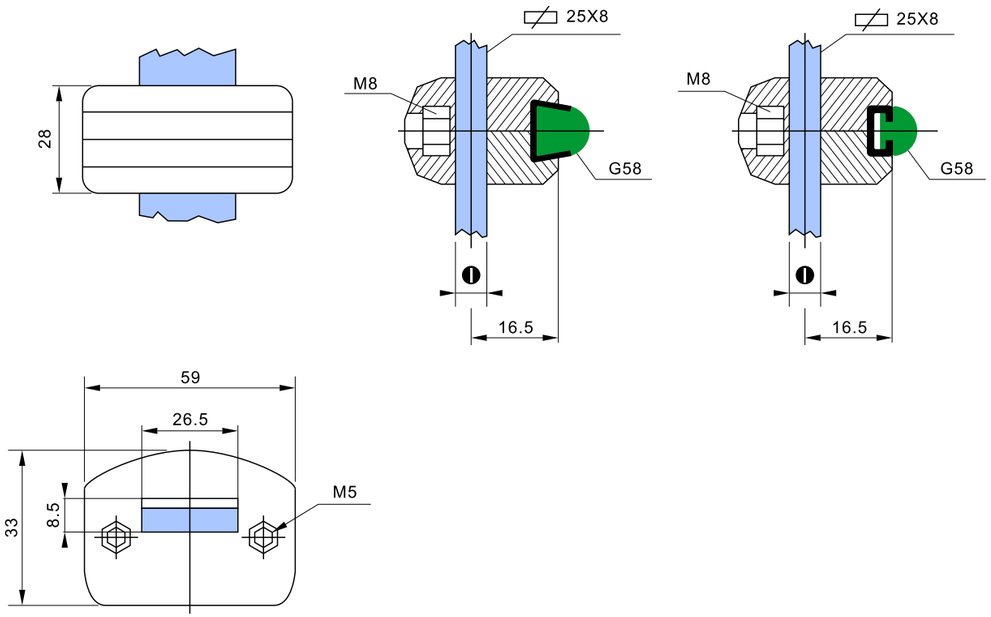

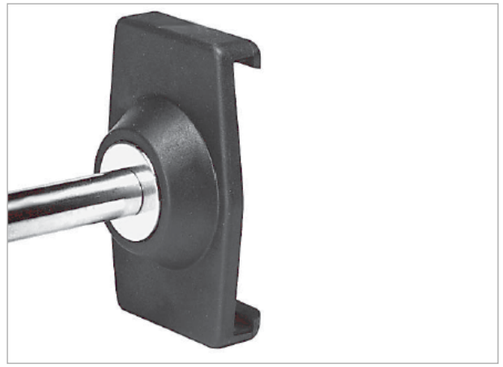

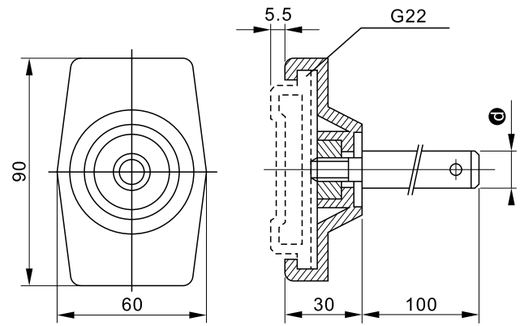

Type	Reference	Material	hole diameter ⓓ mm	Kg
Hollow guardrail clamp	HS-P311-12	Pa6 Nylon+ 304 stainless steel	12	0.18
	HS-P311-14		14	0.22
	HS-P311-16		16	0.25

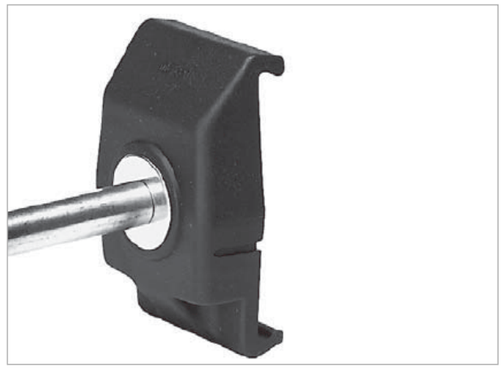

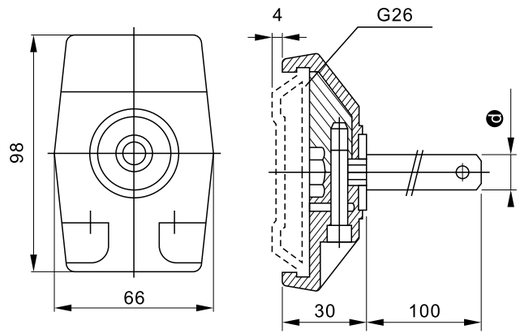

Type	Reference	Material	hole diameter ⓓ mm	Kg
Hollow guardrail clamp	HS-P312-12	Pa6 Nylon+ 304 stainless steel	12	0.22
	HS-P312-14		14	0.25
	HS-P312-16		16	0.29



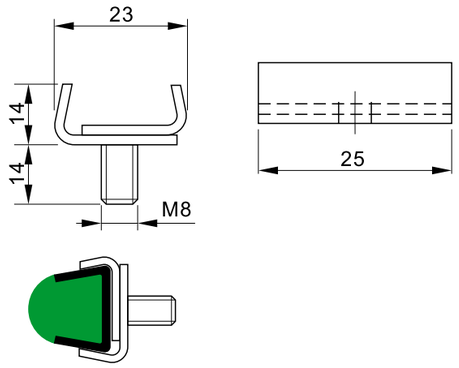

Type	Reference	Material	Kg
Guardrail clamp	HS-P313	304 stainless steel	0.05



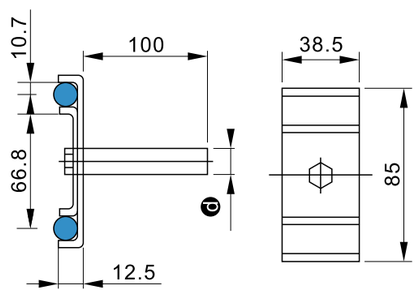

Type	Reference	Material	hole diameter ⓓ mm	Kg
Guardrail clamp	HS-P315-12	304 stainless steel	12	0.29
	HS-P315-14		14	0.32
	HS-P315-16		16	0.36

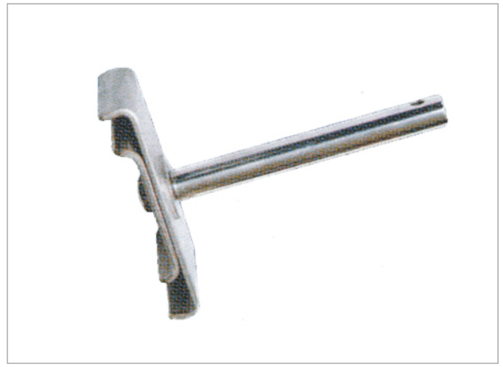

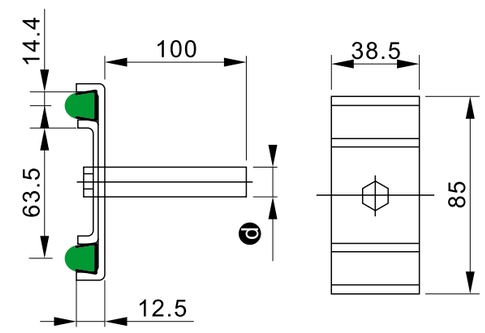

Type	Reference	Material	hole diameter ⓓ mm	Kg
Guardrail clamp	HS-P316-12	304 stainless steel	12	0.25
	HS-P316-14		14	0.28
	HS-P316-16		16	0.32



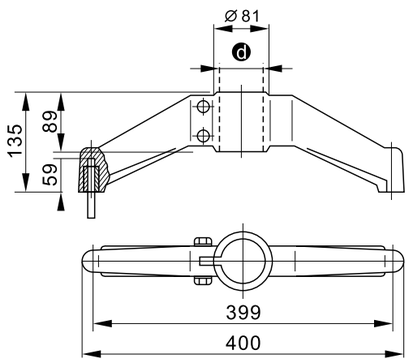

Type	Reference	Material	hole diameter ⓓ mm	Kg
Bipod base	HS-P401A-48.3	Pa66 Nylon +Copper	48.3	1.075
	HS-P401A-50.9		50.9	1.070
	HS-P401A-60.3		60.3	1.025



Type	Reference	Material	hole diameter ⓓ mm	Kg
Bipod and a half 120℃ base	HS-P402A-48.3	Pa66 Nylon +Copper	48.3	1.290
	HS-P402A-50.9		50.9	1.285
	HS-P402A-60.3		60.3	1.240

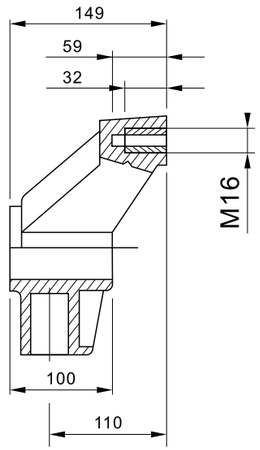

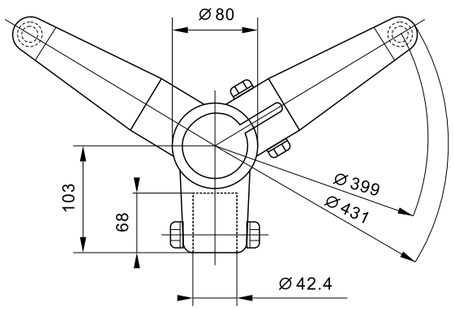



Type	Reference	Material	hole diameter ⓓ mm	Kg
Tripod base	HS-P403A-48.3	Pa66 Nylon +Copper	48.3	1.396
	HS-P403A-50.9		50.9	1.390
	HS-P403A-60.3		60.3	1.380

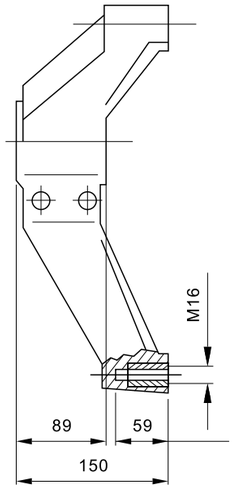

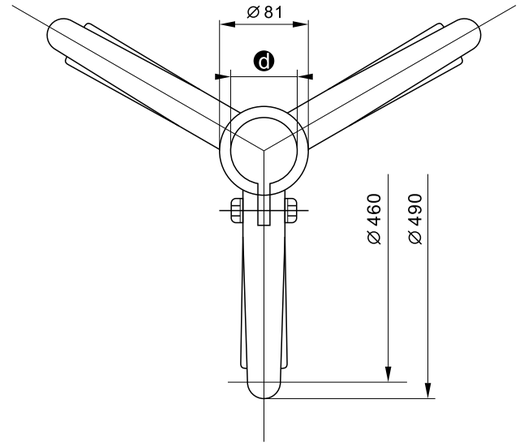



Type	Reference	Material	hole diameter ⓓ mm	Kg
Tripod base B	HS-P403B-48.3	Pa66 Nylon +Copper	48.3	1.396
	HS-P403B-50.9		50.9	1.390
	HS-P403B-60.3		60.3	1.380

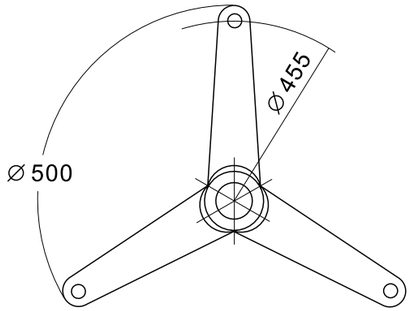

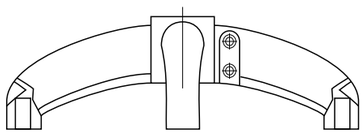

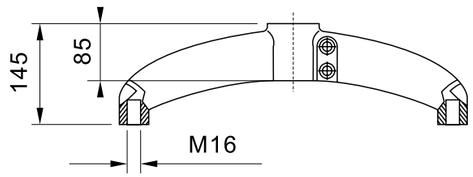



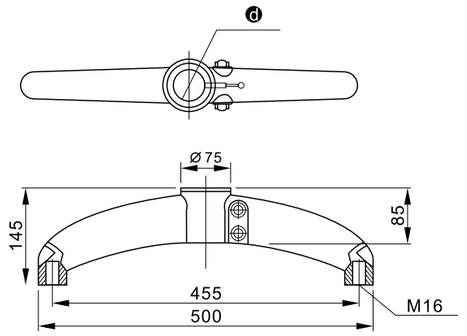

Type	Reference	Material	hole diameter ⓓ mm	Kg
Bipod base	HS-P401B-48.3	Pa66 Nylon +Copper	48.3	1.080
	HS-P401B-50.9		50.9	1.070
	HS-P401B-60.3		60.3	1.030



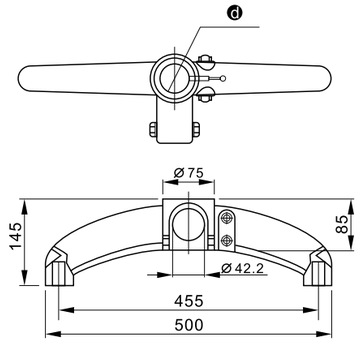

Type	Reference	Material	hole diameter ⓓ mm	Kg
Bipod and a half 180℃ base	HS-P402B-48.3	Pa66 Nylon +Copper	48.3	1.290
	HS-P402B-50.9		50.9	1.270
	HS-P402B-60.3		60.3	1.260



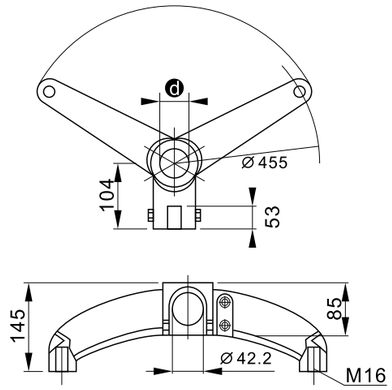

Type	Reference	Material	hole diameter d mm	Kg
Bipod and a half 120℃ base	HS-P402C-48.3	Pa66 Nylon +Copper	48.3	1.290
	HS-P402C-50.9		50.9	1.270
	HS-P402C-60.3		60.3	1.260

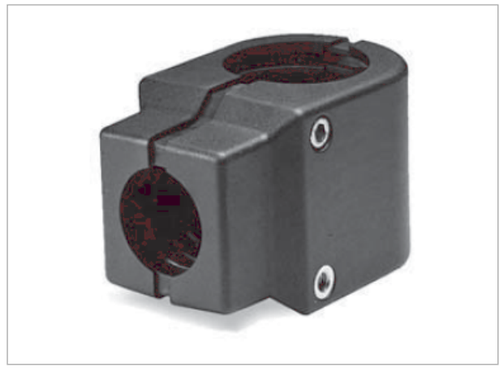

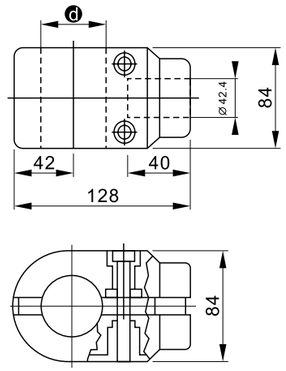

Type	Reference	Material	hole diameter d mm	Kg
Three-way connector for stabilizer blade	HS-P501-48.3	Pa66 Nylon	48.3	0.292
	HS-P501-50.9		50.9	0.286
	HS-P501-60.3		60.3	0.249



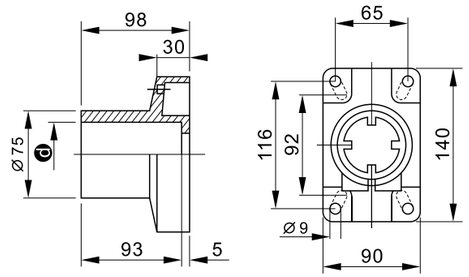

Type	Reference	Material	hole diameter d mm	Kg
Towing bracket	HS-P502-48.3	Pa66 Nylon	48.3	0.380
	HS-P502-50.9		50.9	0.380
	HS-P502-60.3		60.3	0.350



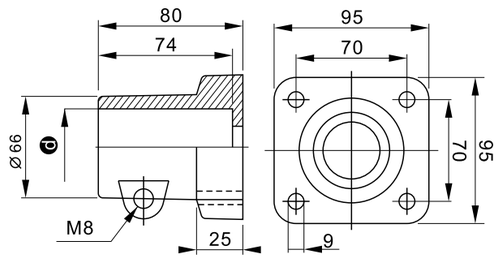

Type	Reference	Material	hole diameter d mm	Kg
Square towing bracket	HS-P503-48.3	Pa66 Nylon	48.3	0.250
	HS-P503-50.9		50.9	0.240



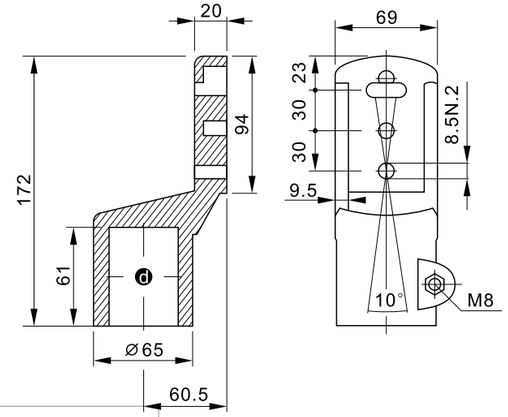

Type	Reference	Material	hole diameter d mm	Kg
Medium lateral supporter	HS-P504-48.3	Pa66 Nylon	48.3	0.315
	HS-P504-50.9		50.9	0.310



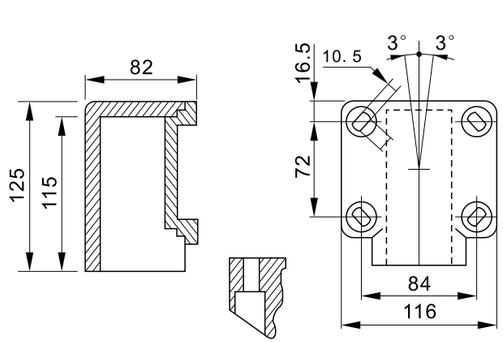

Type	Reference	Material	hole diameter d mm	Kg
Wide-brimmed lateral tapered end	HS-P505-48.3	Pa66 Nylon	48.3	0.522
	HS-P505-50.9		50.9	0.530
	HS-P505-60.9		60.3	0.492



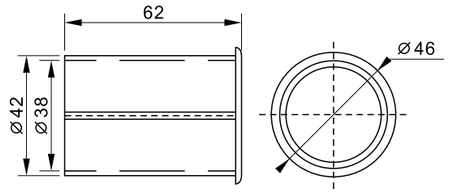

Type	Reference	Material	hole diameter d mm	Kg
Bushing	HS-P506	Pa66 Nylon	38	0.015



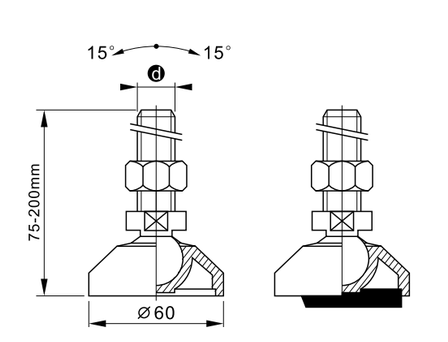

Type	Reference	screw diameter M	screw length L	Material	Kg
Low pin	HS-P700-1650	M16	50	Pa66 Nylon +Various metal bolts	0.26
	HS-P700-1675		75		0.30
	HS-P700-16100		100		0.34
	HS-P700-16150		150		0.40
	HS-P700-20100	M20	100		0.43
	HS-P700-20150		150		0.52
	HS-P700-24100	M24	100		0.60
	HS-P700-24150		150		0.70

Accessories



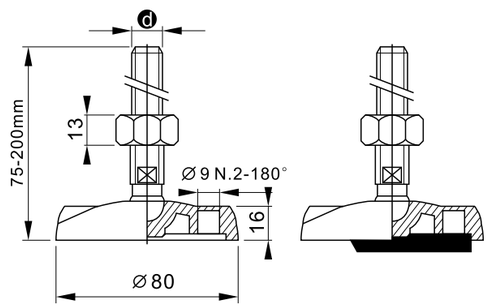

Type	Reference	screw diameter M	screw length L	Material	Kg
Low pin	HS-P701A-1650	M16	50	Pa66 Nylon +Various metal bolts	0.25
	HS-P701A-1675		75		0.30
	HS-P701A-16100		100		0.34
	HS-P701A-16150		150		0.40
	HS-P701A-20100	M20	100		0.43
	HS-P701A-20150		150		0.52
	HS-P701A-24100	M24	100		0.60
	HS-P701A-24150		150		0.70



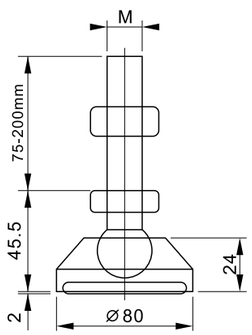

Type	Reference	screw diameter M	screw length L	Material	Kg
Low pin	HS-P701B-1650	M16	50	Pa66 Nylon +Various metal bolts	0.29
	HS-P701B-1675		75		0.32
	HS-P701B-16100		100		0.34
	HS-P701B-16150		150		0.41
	HS-P701B-20100	M20	100		0.51
	HS-P701B-20150		150		0.61
	HS-P701B-24100	M24	100		0.68
	HS-P701B-24150		150		0.74



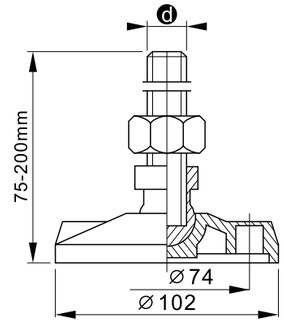

Type	Reference	screw diameter M	screw length L	Material	Kg
Low pin	HS-P702A-1675	M16	75	Pa66 Nylon +Various metal bolts	0.30
	HS-P702A-16100		100		0.35
	HS-P702A-16150		150		0.40
	HS-P702A-20100	M20	100		0.46
	HS-P702A-20150		150		0.55
	HS-P702A-24100	M24	100		0.61
	HS-P702A-24150		150		0.70
	HS-P702A-24200		200		0.85



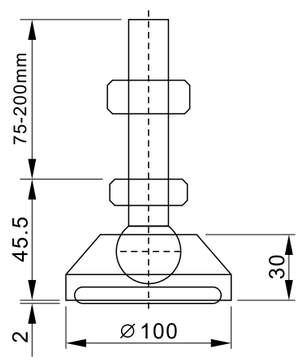

Type	Reference	screw diameter M	screw length L	Material	Kg
Low pin	HS-P702B-1675	M16	75	Pa66 Nylon +Various metal bolts	0.38
	HS-P702B-16100		100		0.40
	HS-P702B-16150		150		0.47
	HS-P702B-20100	M20	100		0.50
	HS-P702B-20150		150		0.60
	HS-P702B-24100	M24	100		0.70
	HS-P702B-24150		150		0.80
	HS-P702B-24200		200		0.90



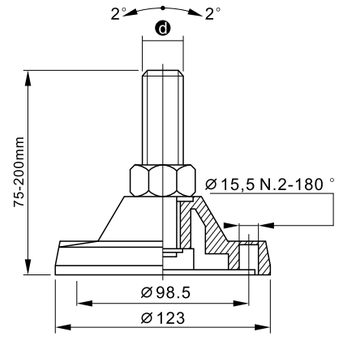

Type	Reference	screw diameter M	screw length L	Material	Kg
Low pin	HS-P703-1675	M16	75	Pa66 Nylon +Various metal bolts	0.45
	HS-P703-16100		100		0.49
	HS-P703-16150		150		0.51
	HS-P703-20100	M20	100		0.62
	HS-P703-20150		150		0.73
	HS-P703-24100	M24	100		0.80
	HS-P703-24150		150		0.85
	HS-P703-24200		200		0.95
	HS-P703-24250		250		1.15

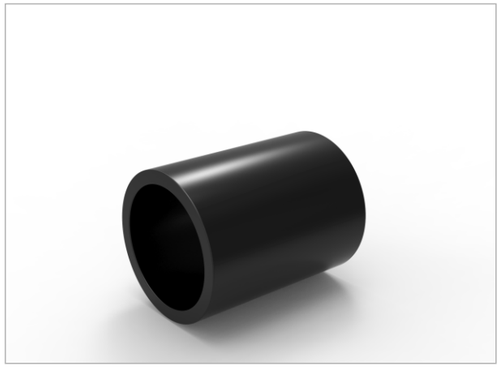

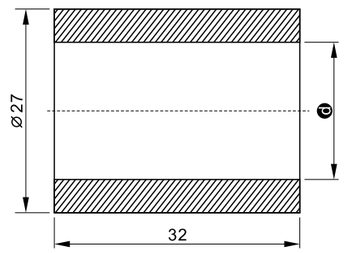

Type	Reference	Material	hole diameter d mm	Kg
Towing wheel B-3	HS-P600-16	Nylon	16	0.013
	HS-P600-20		20	0.080

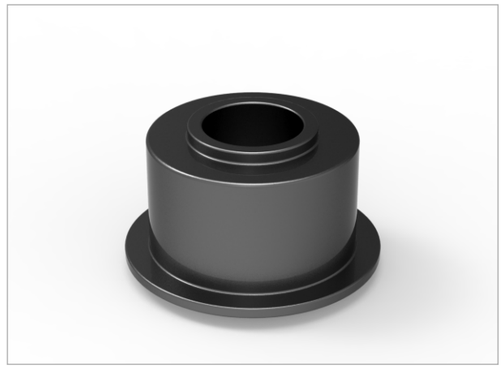

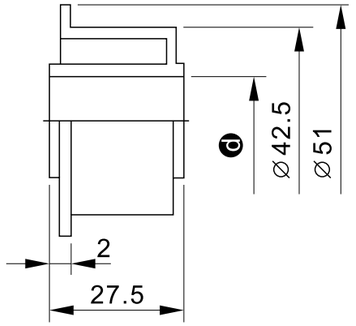

Type	Reference	Material	hole diameter d mm	Kg
Towing wheel B-1	HS-P601-16	Nylon	16	0.025
	HS-P601-20		20	0.020

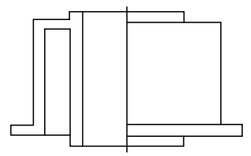

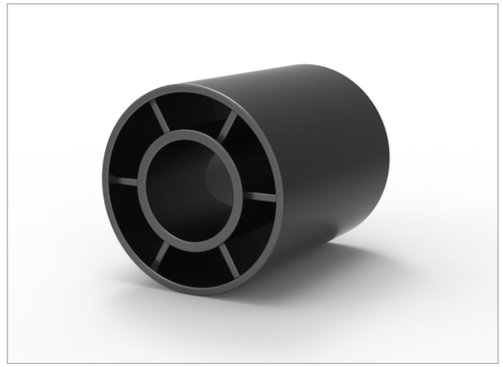

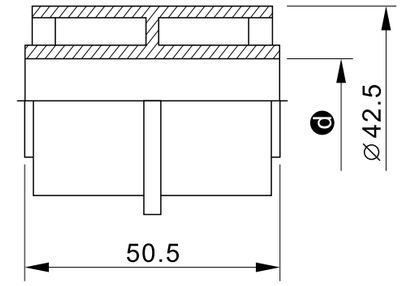

Type	Reference	Material	hole diameter d mm	Kg
Towing wheel B-2	HS-P602-16	Nylon	16	0.035
	HS-P602-20		20	0.025

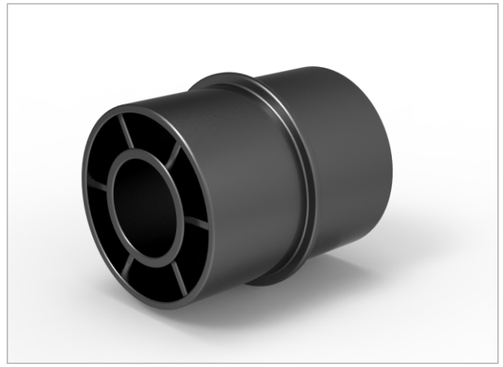

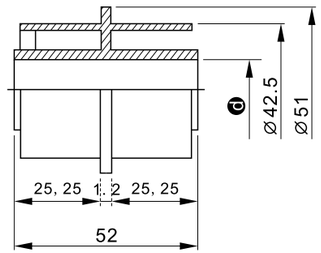

Type	Reference	Material	hole diameter d mm	Kg
Towing wheel B-4	HS-P612-16	Nylon	16	0.040
	HS-P612-20		20	0.030

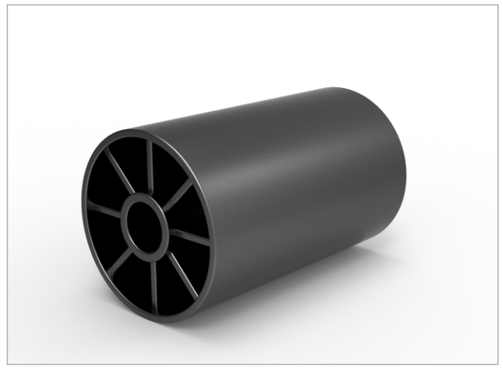

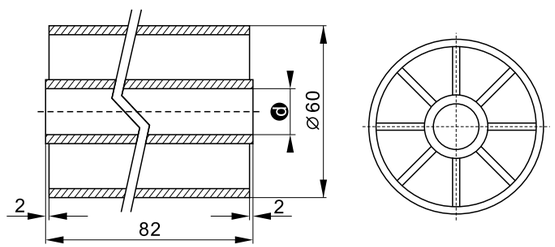

Type	Reference	Material	hole diameter d mm	Kg
Towing wheel C	HS-P604-16	Nylon	16	0.090
	HS-P604-20		20	0.086



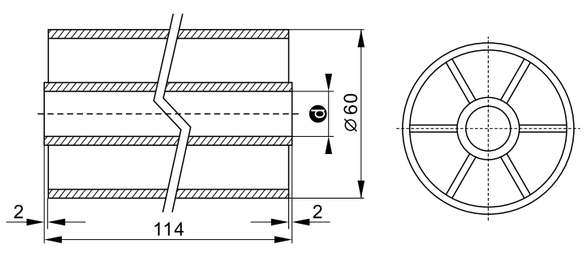

Type	Reference	Material	hole diameter d mm	Kg
Towing wheel D	HS-P605-16	Nylon	16	0.120
	HS-P605-20		20	0.110



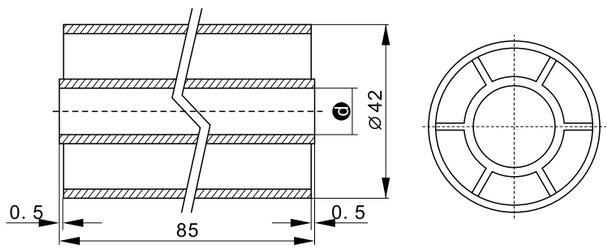

Type	Reference	Material	hole diameter d mm	Kg
Towing wheel G	HS-P610-16	Nylon	16	0.073
	HS-P610-20		20	0.060

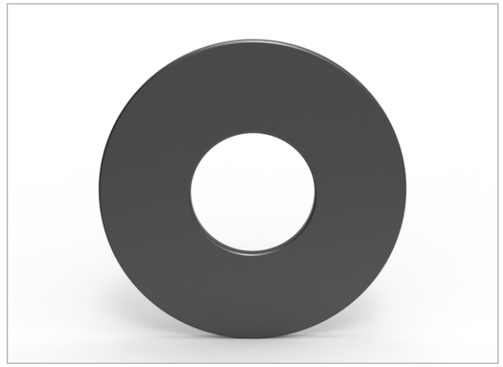

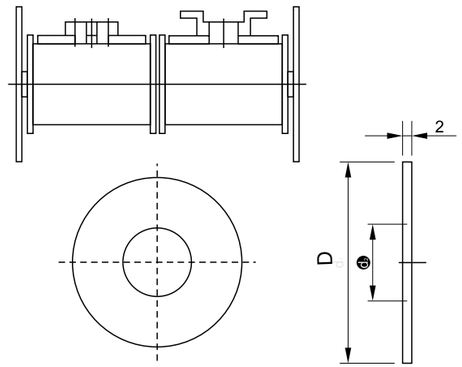

Type	Reference	Material	hole diameter D/d mm	Kg
Towing wheel C. D.G catch	HS-P606-16	Nylon	70/16	0.012
	HS-P606-20		80/20	0.010

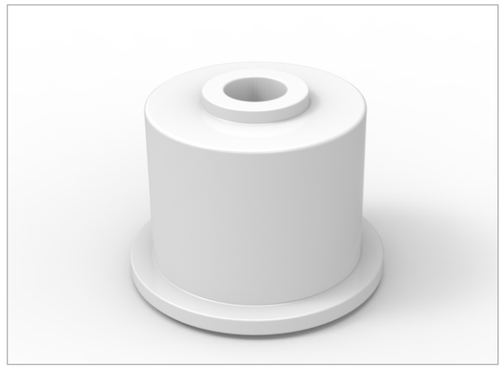

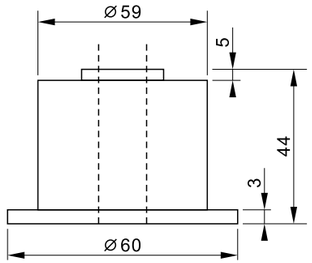

Type	Reference	Material	hole diameter d mm	Kg
Towing wheel A	HS-P603-16	PE polyethylene	16	0.040
	HS-P603-20		20	0.035

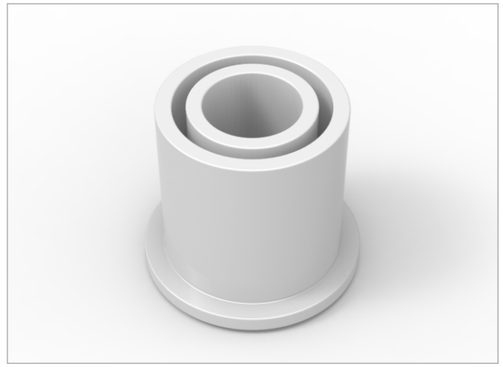

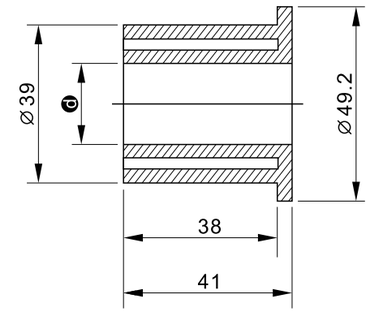

Type	Reference	Material	hole diameter d mm	Kg
Towing wheel E	HS-P607-16	PE polyethylene	16	0.030
	HS-P607-20		20	0.025

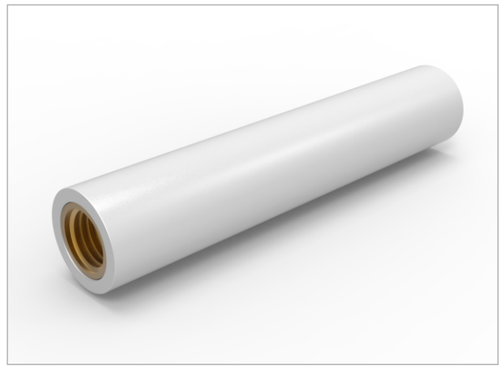

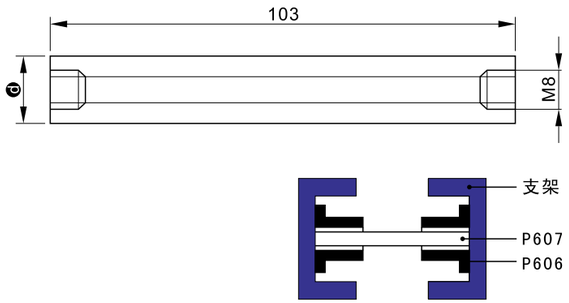

Type	Reference	Material	hole diameter d mm	Kg
Support shaft B	HS-P608	PE polyethylene	20	0.11

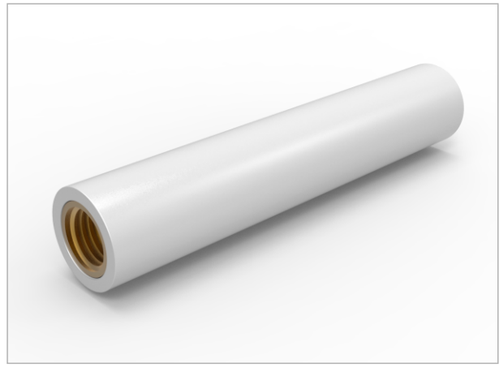

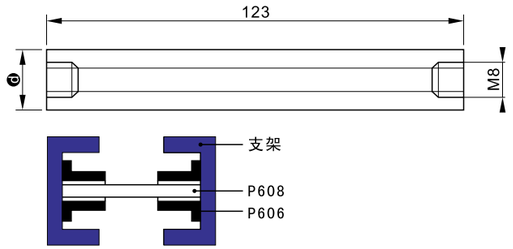

Type	Reference	Material	hole diameter d mm	Kg
Support shaft B	HS-P609	PE polyethylene	20	0.11

suitbale for 114.3mm width plastic chians

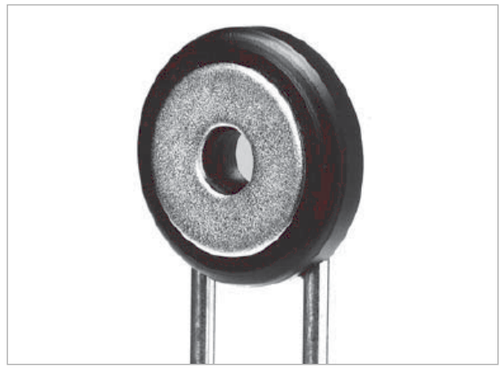

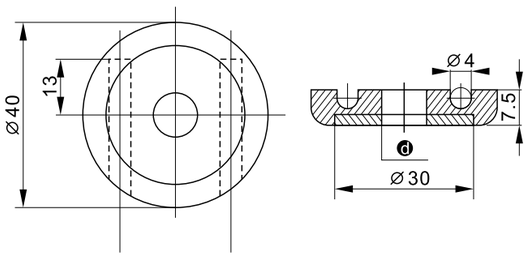

Type	Reference	Material	hole diameter d mm	Kg
Sink hanger head	HS-P620	Pa6 Nylon	10	0.075



Type	Reference	Length
Sink hanger	HS-P621-250	180mm
	HS-P621-253	250mm
	HS-P621-255	245mm
	HS-P621-257	180mm
	HS-P621-251	220mm

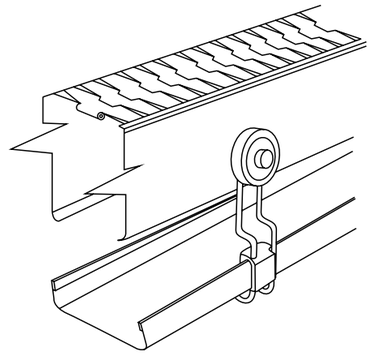

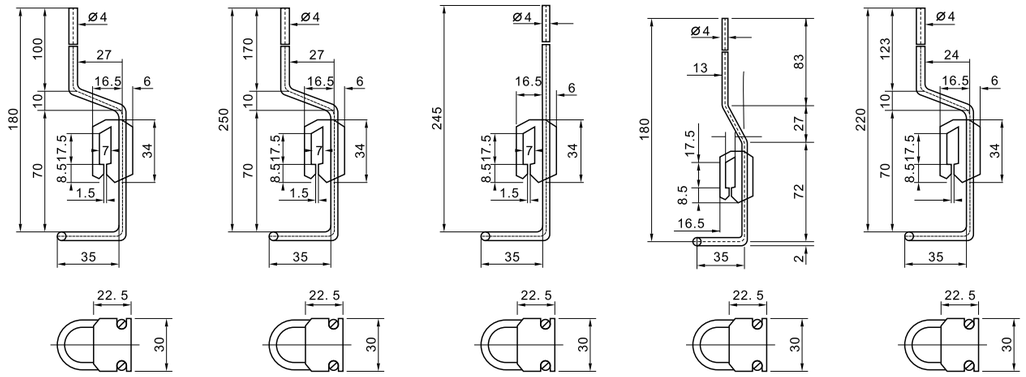



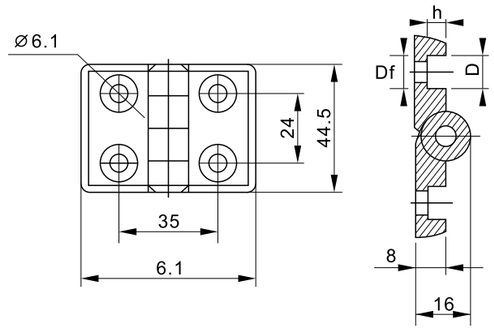

Type	Reference	Fixing screw	Df mm	D mm	h mm	Kg
Hinge C	HS-P801	M6	∅6.5	∅10.5	4.5	0.031



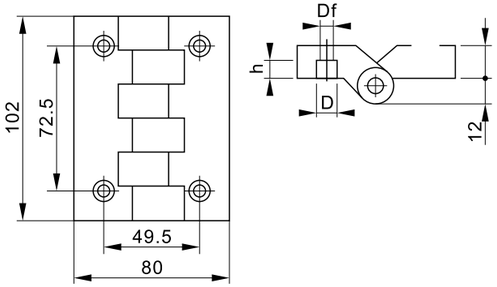

Type	Reference	Fixing screw	Df mm	D mm	h mm	Kg
Hinge A	HS-P802-6	M6	∅6.5	∅10.5	4.5	0.031
	HS-P802-8	M8	∅8.5	∅13.2	6	0.031



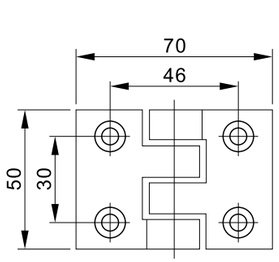

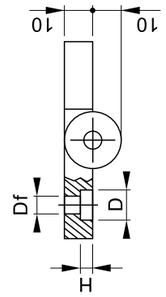

Type	Reference	Fixing screw	Df mm	D mm	h mm	Kg
Hinge B	HS-P803	M6	∅6.5	∅10.5	6	0.031



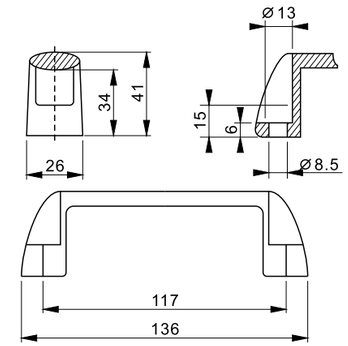

Type	Reference	Colour	Kg	Material
Medium-sized toothless handle	HS-P807	Black	0.07	Strengthened nylon PA6 embedded piece is copper



Type	Reference	(Diam)	Tubing outer dia	Thickness	Kg	Material
Theaded Tube EndsFor Square Tube	HS-P804-3010	M10	▣ 30	1.75	300	Strengthened nylon PA6 embedded piece is copper
	HS-P804-3012	M12				
	HS-P804-3512	M12	▣ 35	1.5	400	
	HS-P804-3516	M16				
	HS-P804-3812	M12	▣ 28	1.5 , 1.75	500	
	HS-P804-3816	M16				
	HS-P804-3820	M20				
	HS-P804-4012	M12	▣ 40	1.25 , 1.5 1.75	700	
	HS-P804-4016	M16				
	HS-P804-5016	M16	▣ 50	1.5 , 1.75	1000	
	HS-P804-5020	M20		2 , 2.5		
	HS-P804-5020	M20				

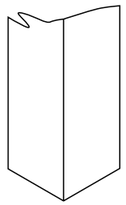

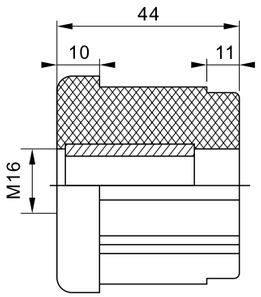

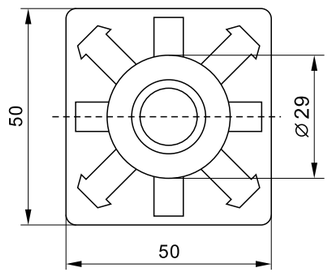

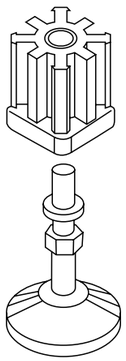



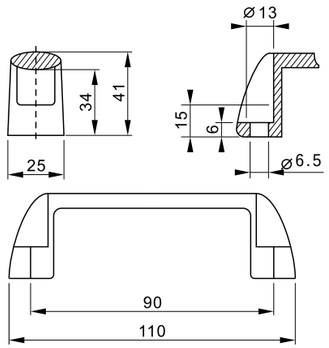

Type	Reference	Colour	Kg	Material
Small-sized toothless handle	HS-P809	Black	0.07	Strengthened nylon PA6 embedded piece is copper



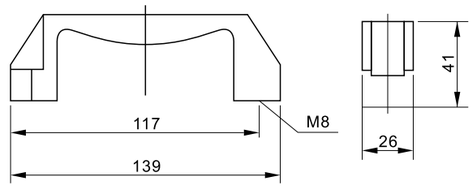

Type	Reference	Colour	Kg	Material
Medium-sized tooth handle	HS-P810	Black	0.07	Strengthened nylon PA6 embedded piece is copper



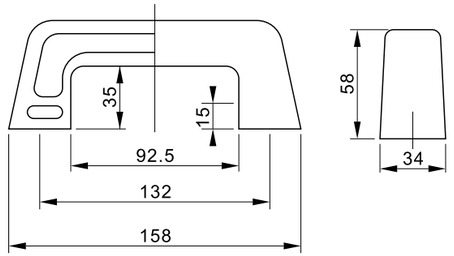

Type	Reference	Colour	Kg	Material
Large-sized tooth handle	HS-P811	Black	0.12	Strengthened nylon PA6 embedded piece is copper



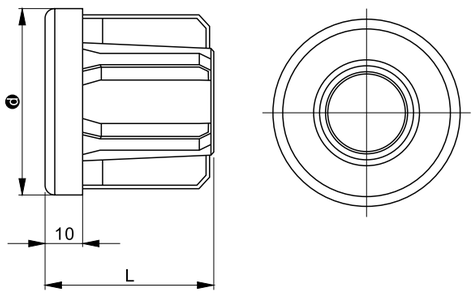

Type	Reference	Diam	Length (L)mm	Tubing outer dia d	Thickness	Kg	Kg	Material
Round tube foot strap	HS-P805-4812	M12	45	◎ 48	1.75	0.048	500	Strengthened nylon PA6 embedded piece is copper
	HS-P805-4813	M16	45					
	HS-P805-4820	M20	45					
	HS-P805-5013	M16	54	◎ 50	1.5	0.060	1000	
	HS-P805-5020	M20	54					



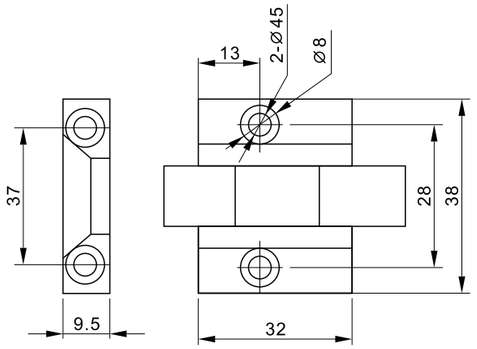

Type	Reference
Door lock	HS-P812



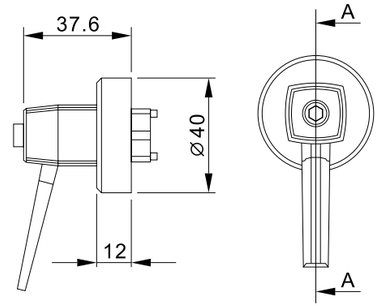

Type	Reference
Rotatable door lock	HS-P813

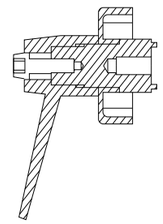

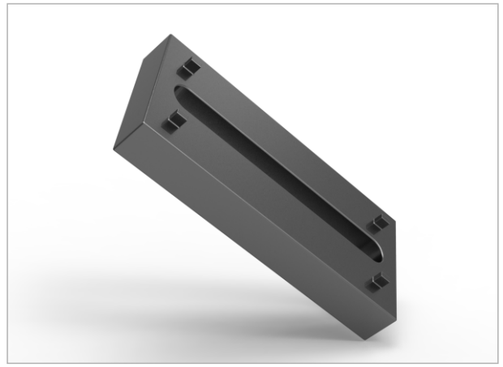

Type	Reference	Kg
Cushion block	HS-P815	0.06

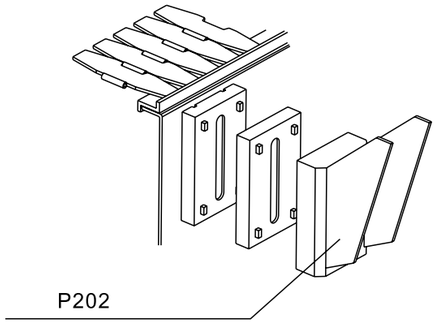

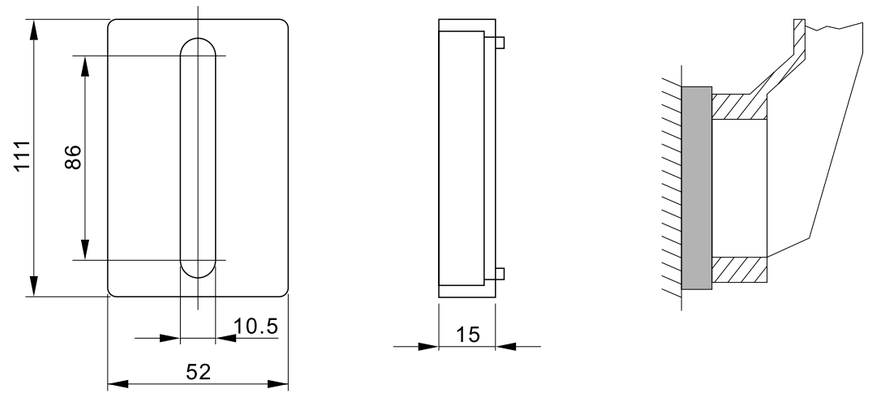



Type	Reference	dia d mm	A	B	C	H	J	T	Z	M	Material
Square plastic bearing sleeve	HS-P920-LS-205	25	95	70	11	17	14.3	34	28.5	34	Reinforced plastics
	HS-P920-LS-206	30	107	83	11	19	14.3	39.7	31.5	38.1	
	HS-P920-LS-207	35	118	92	13	21.5	15.5	44.9	34.5	42.9	
	HS-P920-LS-208	40	130	102	14	23	17	51.2	36.5	49.2	

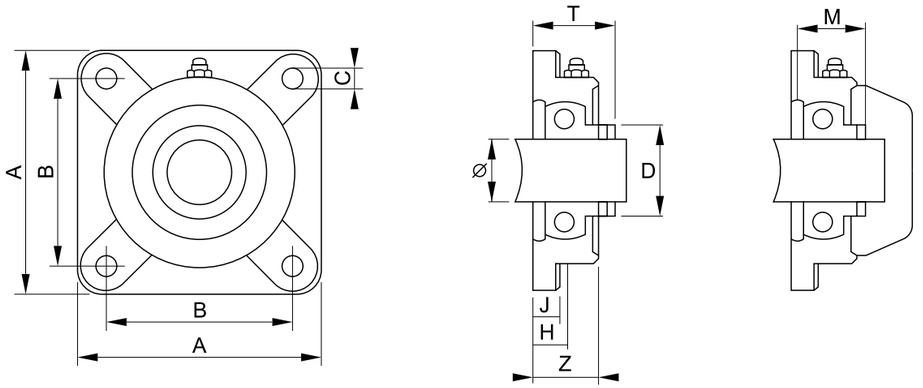



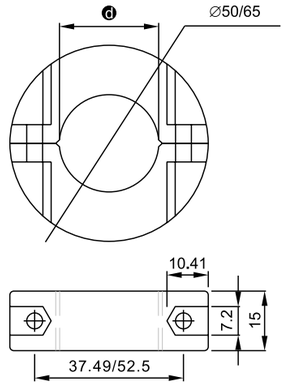

Type	Reference	dia d mm	Colour	Material
Round fixed shaft sleeve	HS-P910-25	25.1	Black	Nylon Pa6+ Stainless bolt
	HS-P910-30	30.1		
	HS-P910-35	35.1		
	HS-P910-40	40.1		

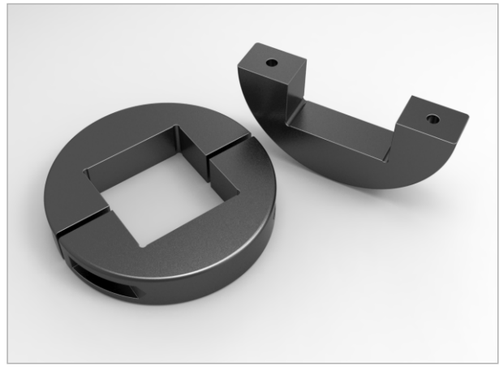

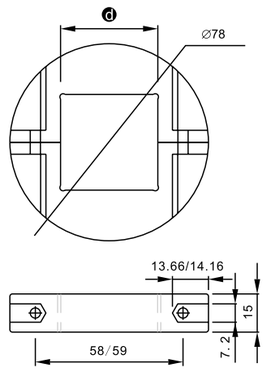

Type	Reference	dia d mm	Colour	Material
Square fixed shaft sleeve	HS-P912-38	38.2	Black	Nylon Pa6+ Stainless bolt
	HS-P912-40	40.2		



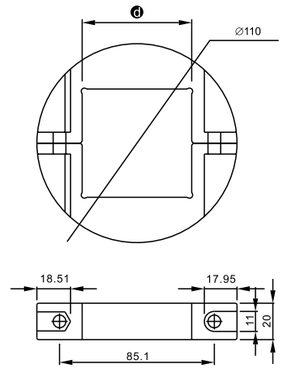

Type	Reference	dia d mm	Colour	Material
Square fixed shaft sleeve	HS-P914-60	60.2	Black	Nylon Pa6+ Stainless bolt



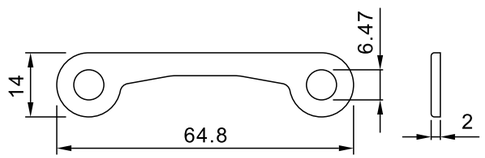

Type	Reference	Material	Colour
Strengthened iron links	HS-P100	stainless steel	Silvery



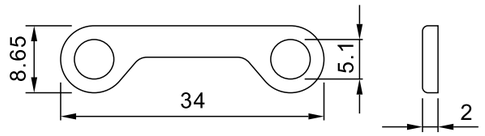

Type	Reference	Material	Colour
Strengthened iron links	HS-P200(500)	stainless steel	Silvery



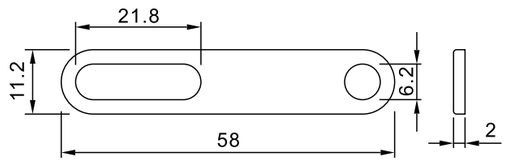

Type	Reference	Material	Colour
Strengthened iron links	HS-P300B-HD	stainless steel	Silvery



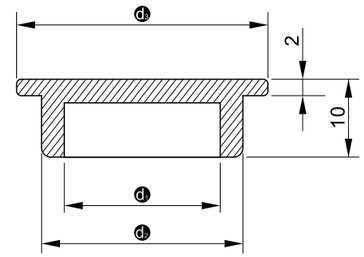

Type	Reference	d1	d2	d3	Colour	Kg	Material
Plastic seal head	HS-P961A	14	20	24	Black	0.0035	Nylon
	HS-P961B	20	26	32	Black	0.0050	Nylon

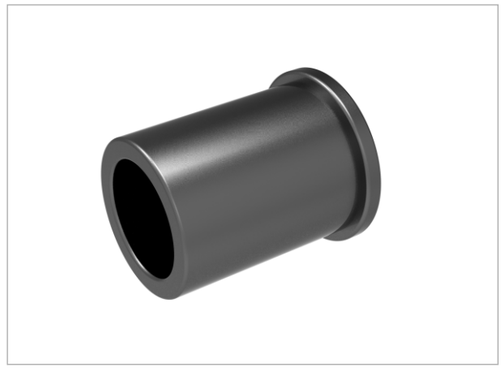

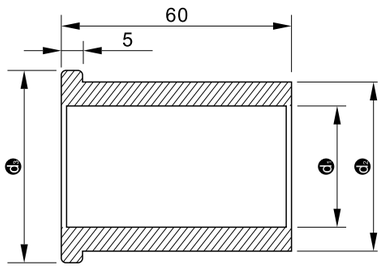

Type	Reference	d1	d2	d3	Colour	Kg	Material
Plastic seal head	HS-P962	32	44	50	Black	0.063	Nylon

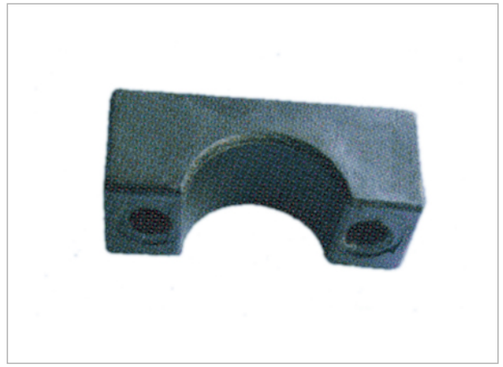

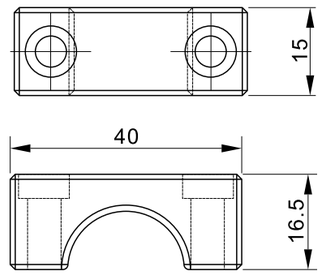

Type	Reference	Colour	Kg	Material
Fixed seat	HS-P968	Black	0.010	Nylon



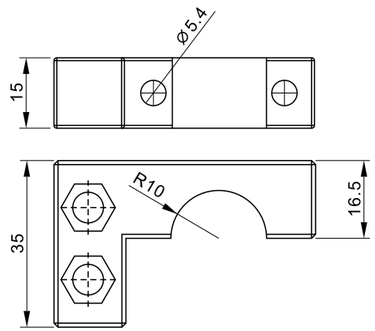

Type	Reference	Colour	Kg	Material
Fixed seat	HS-P969	Black	0.018	Nylon

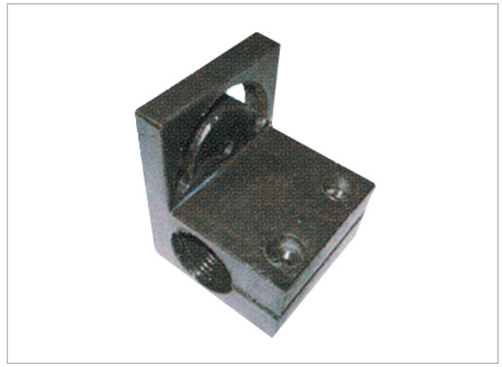

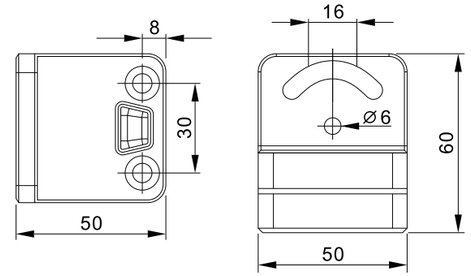

Type	Reference	Colour	Kg	Material
Fixed seat	HS-P963	Black	0.063	Nylon

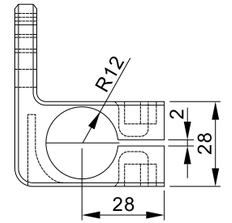



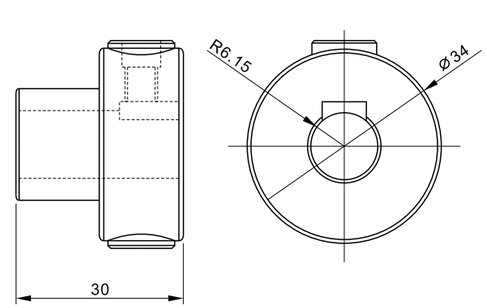

Type	Reference	Colour	Kg	Material
Fixed seat	HS-P967	Black	0.022	Nylon



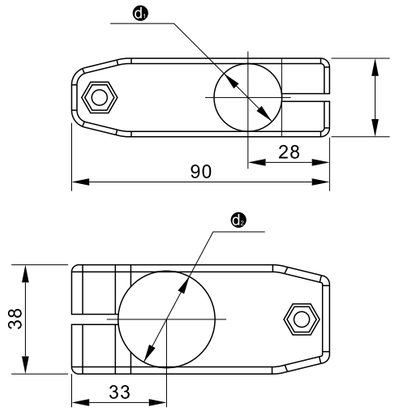

Type	Reference	d_1	d_2	Colour	Kg	Material
Cross connection head	HS-P965	24	32	Black	0.063	Nylon

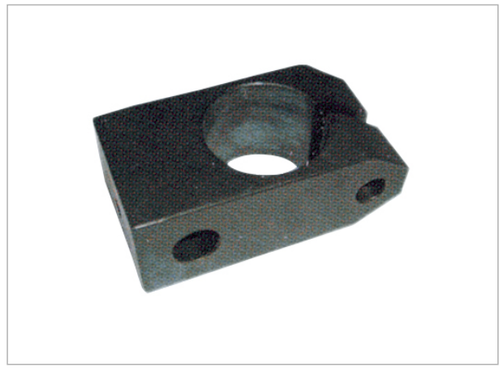

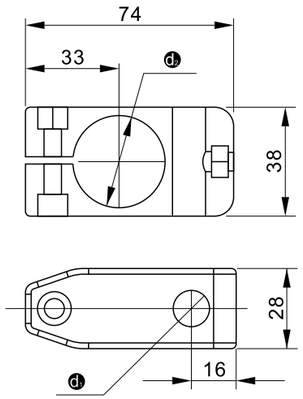

Type	Reference	d_1	d_2	Colour	Kg	Material
Cross connection head	HS-P966	24	32	Black	0.057	Nylon



Type	Reference	Material	Kg
Roller Transfer	HS-P930-1	Polyformaldehyde + stainless steel (POM+SUS)	0.076

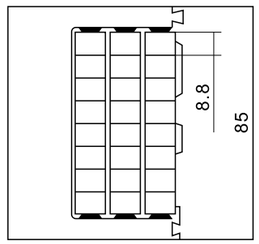

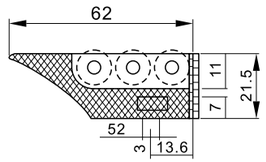

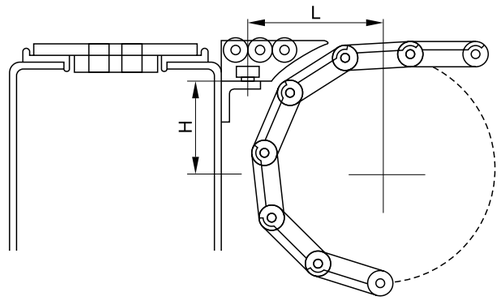



Type	Reference	Material	Kg
Roller Transfer	HS-P931	Polyformaldehyde + stainless steel (POM+SUS)	0.068

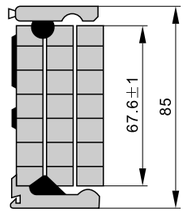

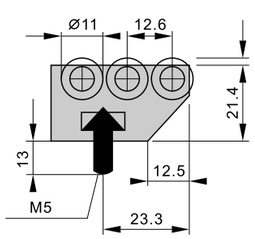

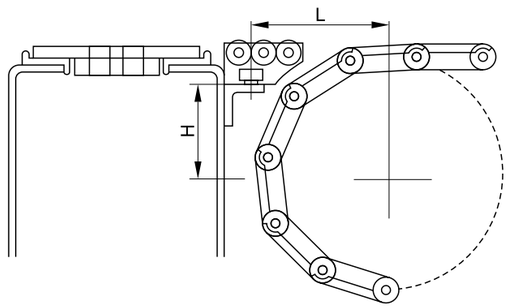

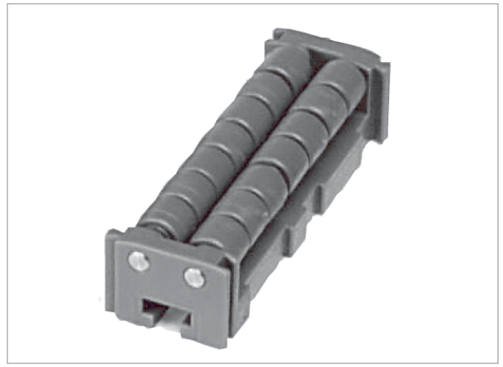

Type	Reference	Material	Kg
Roller Transfer	HS-P932-1	Polyformaldehyde + stainless steel (POM+SUS)	0.050

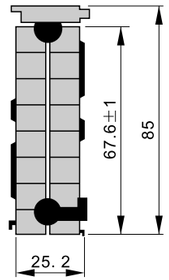

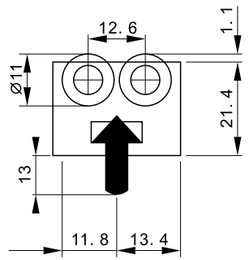

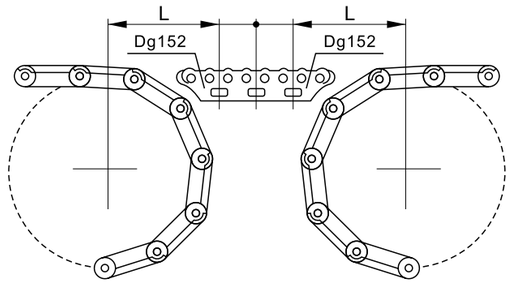



Type	Reference	Material	Kg
Roller Transfer	HS-P930-2	Polyformaldehyde + stainless steel (POM+SUS)	0.076

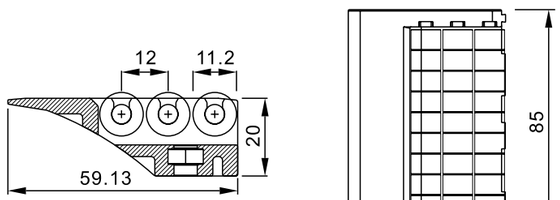

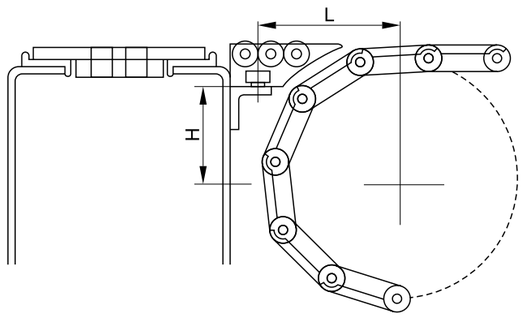

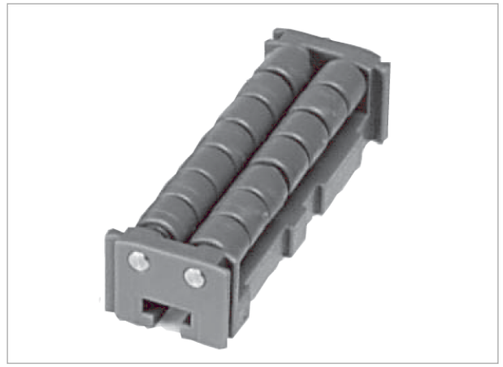

Type	Reference	Material	Kg
Roller Transfer	HS-P932-2	Polyformaldehyde + stainless steel (POM+SUS)	0.050

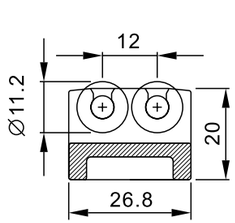

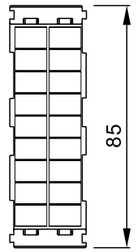

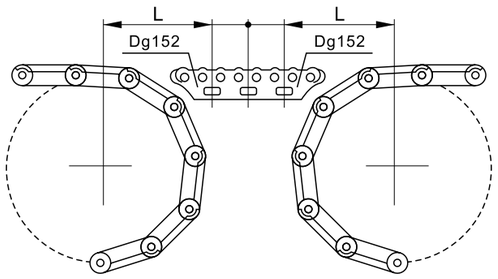

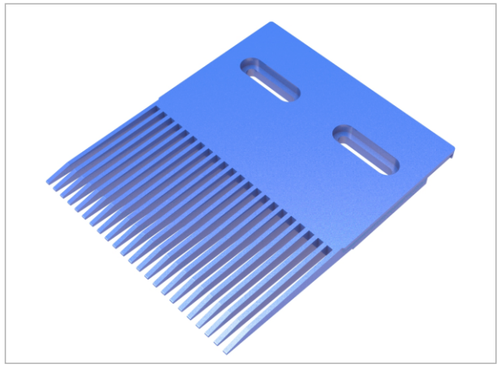

Type	Reference	Colour	Material
Comb-type connection board	HS-P901D	Blue	Plastic steel

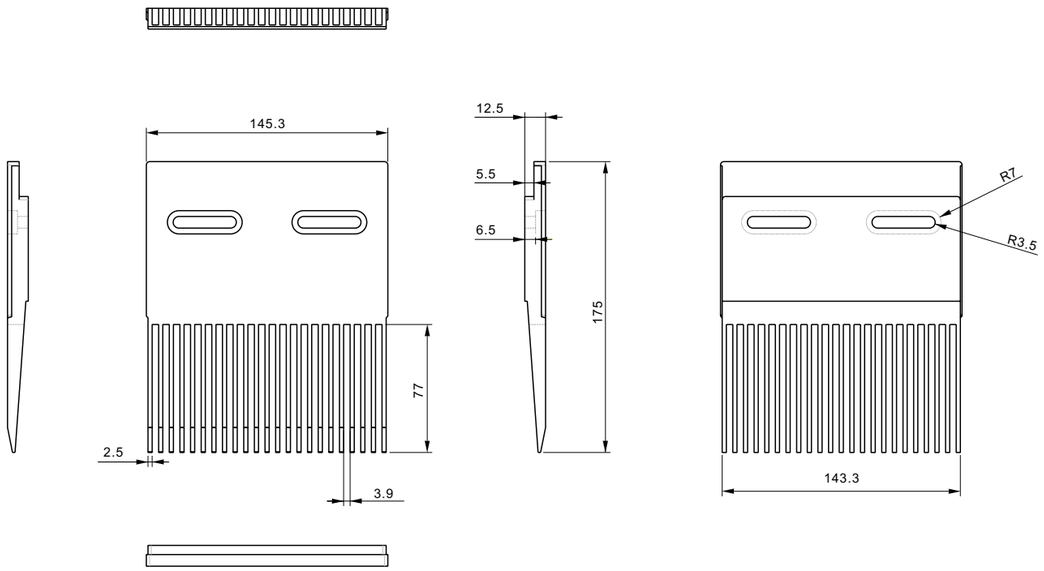

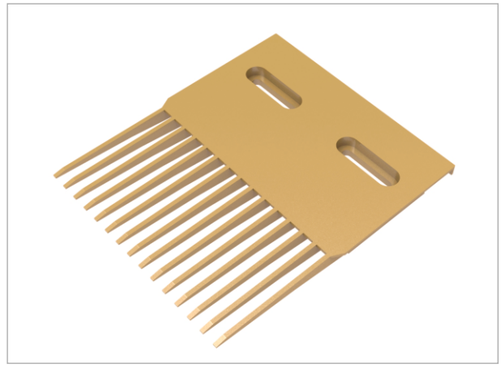

Type	Reference	Colour	Material
Comb-type connection board	HS-P600B	Brown	Plastic steel

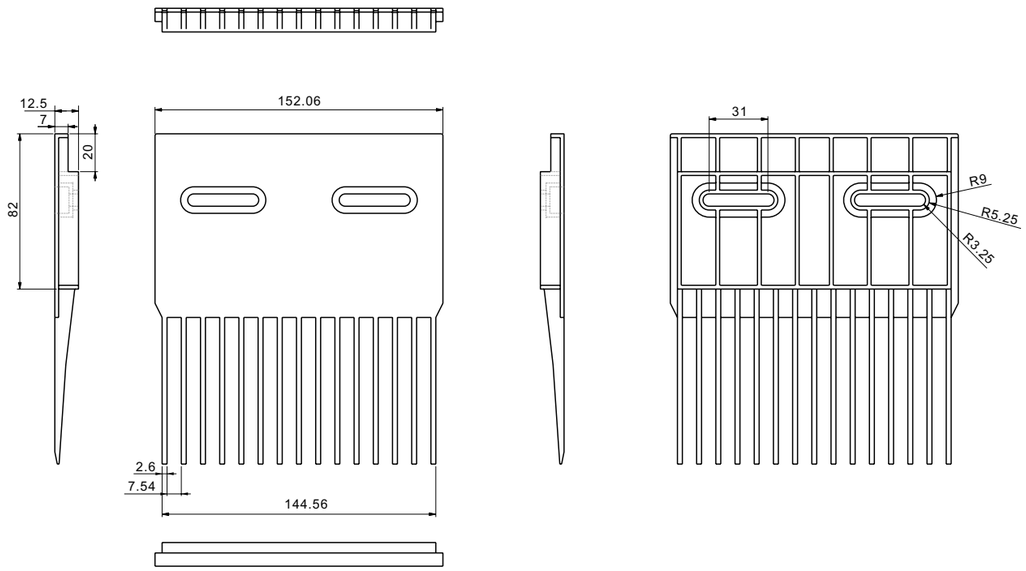

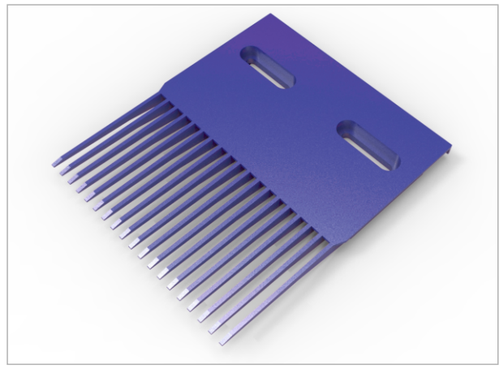

Type	Reference	Colour	Material
Comb-type connection board	HS-P701B	Blue	Plastic steel

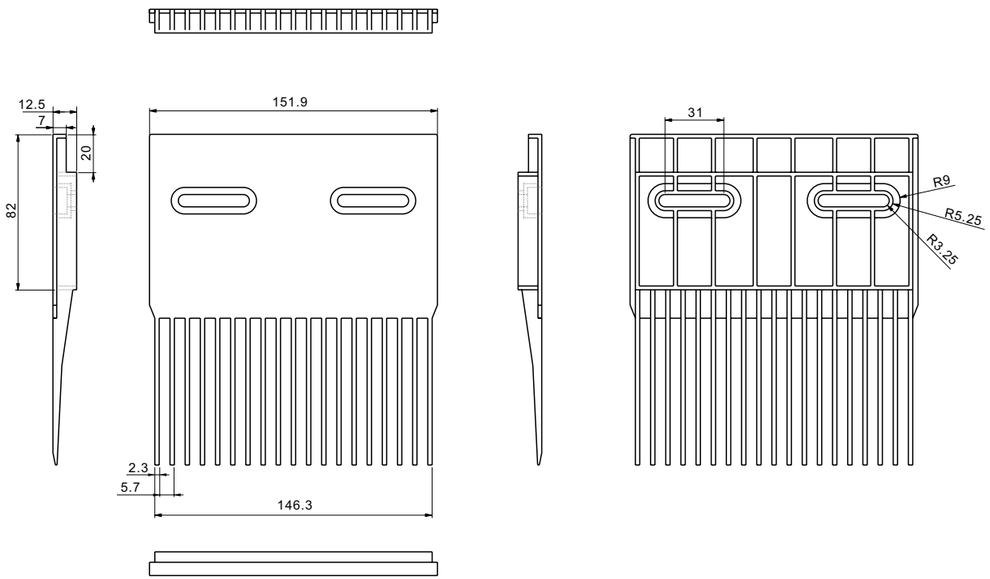

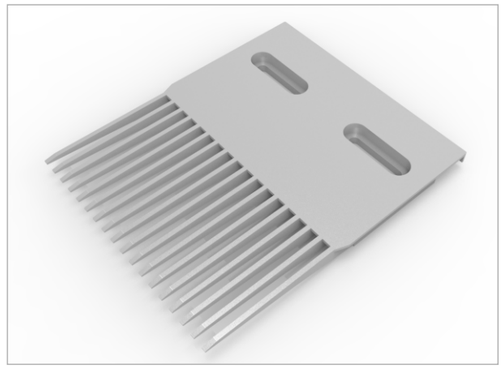

Type	Reference	Colour	Material
Comb-type connection board	HS-P2500D	Gray	Plastic steel

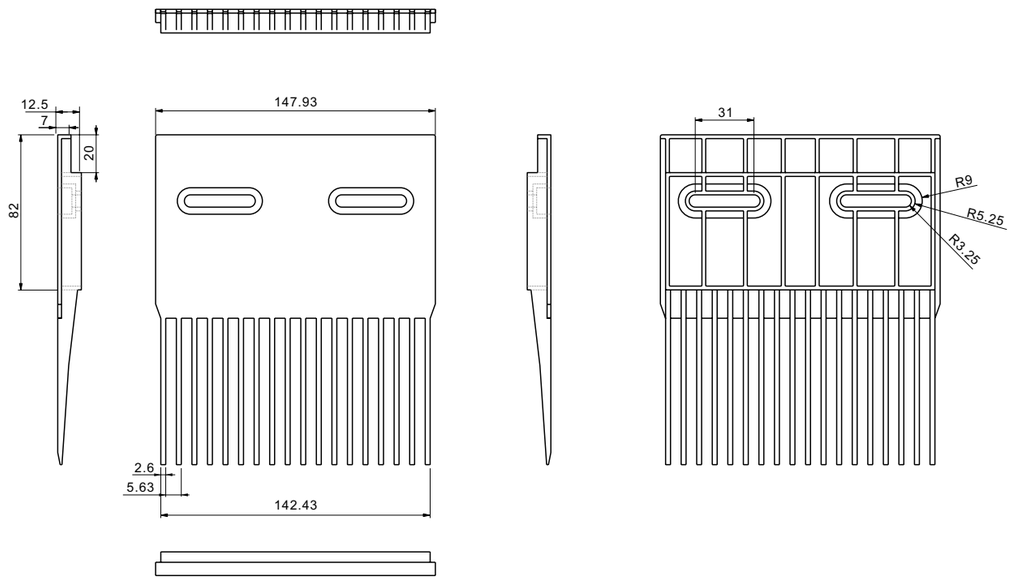

Accessories

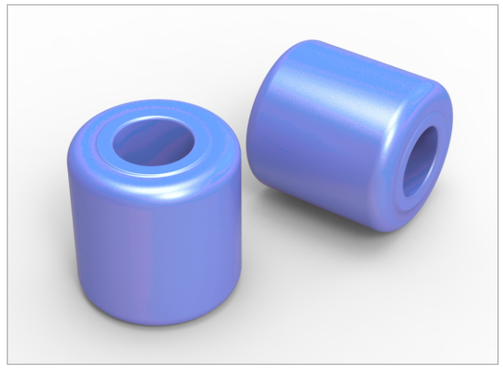

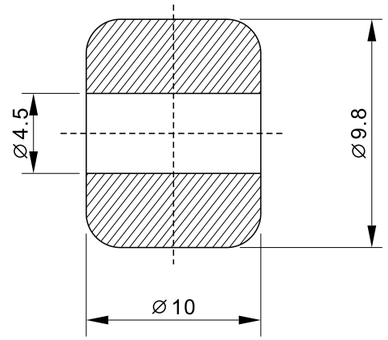

Type	Reference	Colour	Material
Transition ball	HS-P950	Blue	Polyformald-ehyde(POM)

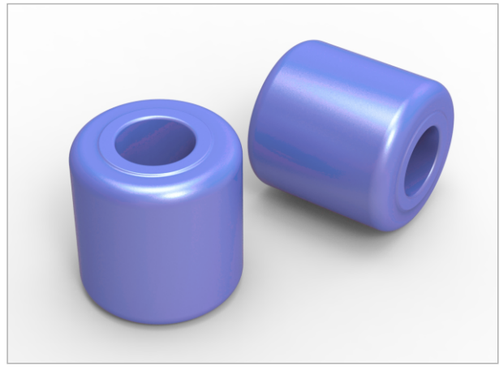

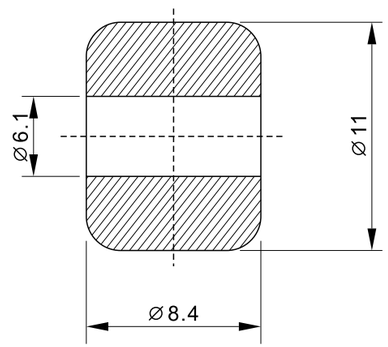

Type	Reference	Colour	Material
Transition ball	HS-P951	Blue	Polyformald-ehyde(POM)

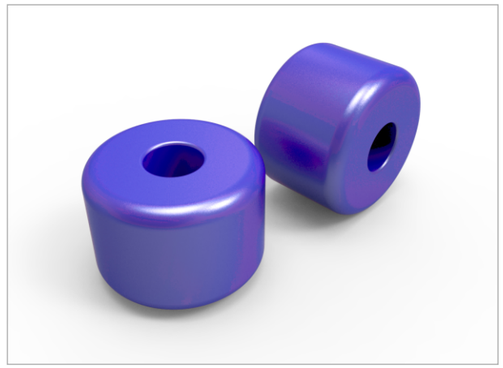

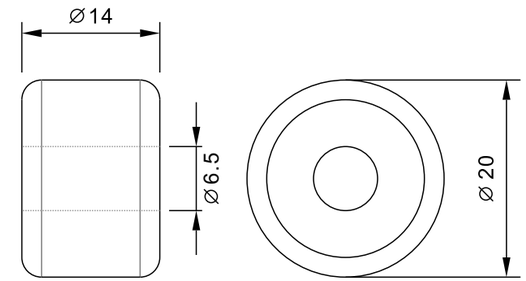

Type	Reference	Colour	Material
Transition ball	HS-P100	Blue	Polyformald-ehyde(POM)

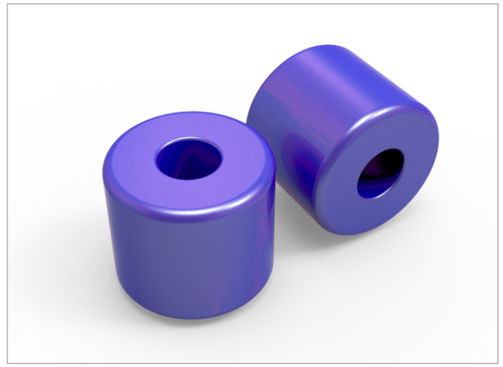

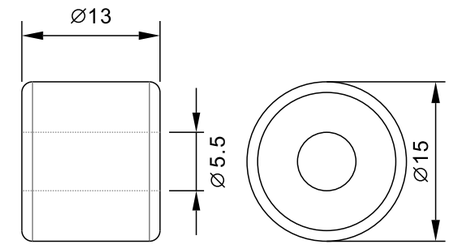

Type	Reference	Colour	Material
Transition ball	HS-P200	Blue	Polyformald-ehyde(POM)



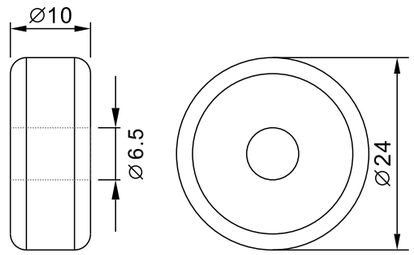

Type	Reference	Colour	Material
Transition ball	HS-P300	Blue	Polyformald-ehyde(POM)



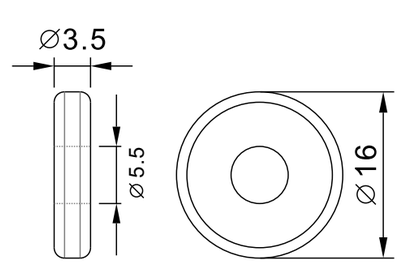

Type	Reference	Colour	Material
Transition ball	HS-P500	Blue	Polyformald-ehyde(POM)

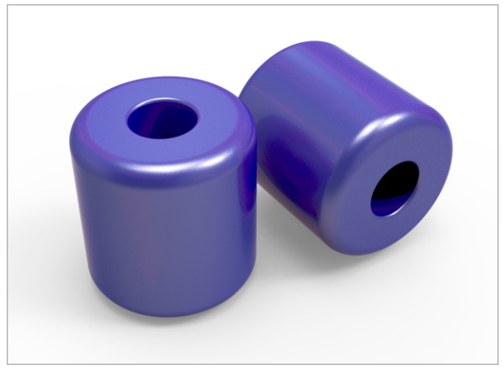

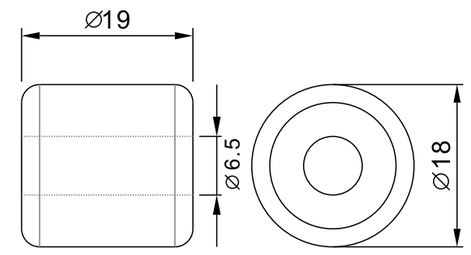

Type	Reference	Colour	Material
Transition ball	HS-P501	Blue	Polyformald-ehyde(POM)

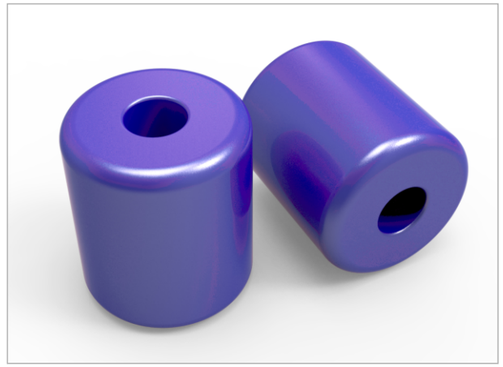

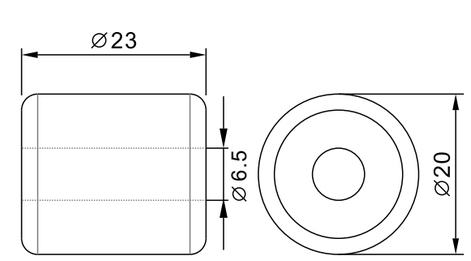

Type	Reference	Colour	Material
Transition ball	HS-P900	Blue	Polyformald-ehyde(POM)

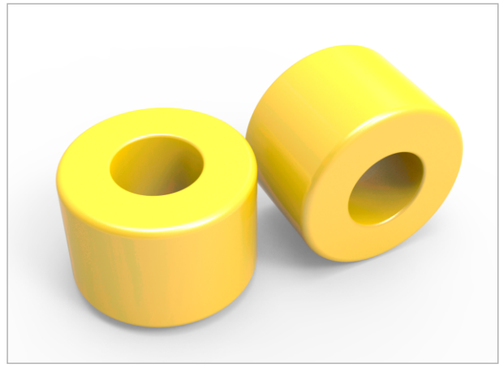

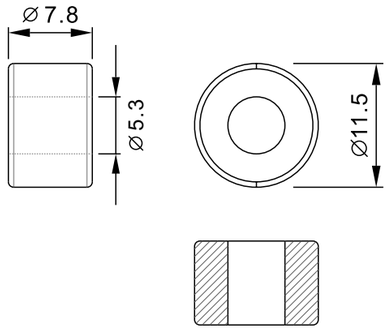

Type	Reference	Colour	Material
Transition ball	HS-P1100	Yellow	Polyformald-ehyde(POM)

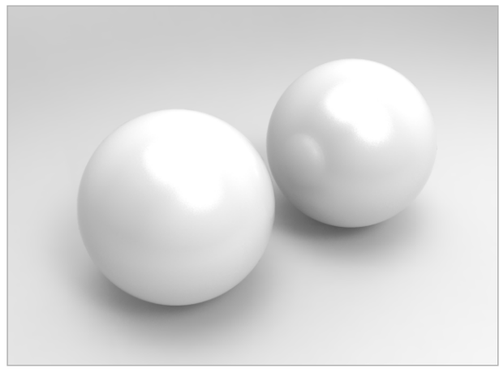

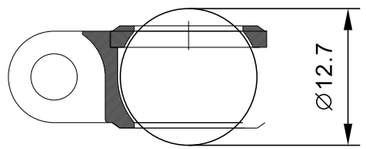

Type	Reference	Colour	Material
Transition ball	HS-P2800	White	Polyformald-ehyde(POM)